GENERAL NOTES:

(VALID FOR 20 GAGE GALVANIZED STEEL STORM PANELS)

1. STORM PANEL SHOWN ON THIS PRODUCT EVALUATION DOCUMENT (P.E.D.) HAS BEEN VERIFIED FOR COMPLIANCE IN ACCORDANCE WITH THE 2026 (9th EDITION) OF THE FLORIDA BUILDING CODE.

   DESIGN WIND LOADS SHALL BE DETERMINED AS PER SECTION 1620 OF THE ABOVE MENTIONED CODE, FOR A WIND SPEED AS REQUIRED BY THE JURISDICTION WHERE THESE SHUTTERS WILL BE INSTALLED AND FOR A DIRECTIONALITY FACTOR Kd=0.85. USING ASCE 7-22 AND SHALL NOT EXCEED THE MAXIMUM (A.S.D.) DESIGN PRESSURE RATINGS INDICATED ON SHEETS 7 THRU 12, 14, 15, 16, 19 & 20.

   IN ORDER TO VERIFY THE ABOVE CONDITION, ULTIMATE DESIGN WIND LOADS DETERMINED PER ASCE 7-22 SHALL BE FIRST REDUCED TO A.S.D. DESIGN WIND LOADS BY MULTIPLYING THEM BY 0.6 IN ORDER TO COMPARE THESE W/ MAX. (A.S.D) DESIGN PRESSURE RATINGS INDICATED ON SHEETS 7 THRU 12, 14, 15, 16, 19 & 20.

   IN ORDER TO VERIFY THAT ANCHORS ON THIS P.E.D. AS TESTED WERE NOT OVER STRESSED, A 33% INCREASE IN ALLOWABLE STRESS FOR WIND LOADS WAS NOT USED IN THEIR ANALYSIS. FASTENERS SPACING TO WOOD HAS BEEN DETERMINED IN ACCORDANCE WITH ANSI/AWC NDS-24.

   STORM PANEL'S ADEQUACY FOR IMPACT AND WIND RESISTANCE HAS BEEN VERIFIED IN ACCORDANCE WITH SECTION 1626 OF THE ABOVE MENTIONED CODE AS PER HURRICANE ENGINEERING & TESTING INC. REPORTS 96-569, 96-570 & 96-T30 AND FENESTRATION TESTING LAB. INC., REPORTS #2032 & #2126 , AS PROTOCOLS TAS-201, TAS-202 AND TAS-203. AS WELL AS AMERICAN TEST LAB OF SOUTH FLORIDA REPORT #0219.01-09, AS PER TAS 201, TAS 202 AND TAS 203 STANDARDS. IMPACT MISSILE IS 9Lb, 2"x4" 50ft/Sec.
2. ALL ALUMINUM EXTRUSIONS TO BE 6063-T6 ALLOY AND TEMPER. (UNLESS OTHERWISE NOTED). SEE SHEET 2. ALL ALUMINUM EXTRUSIONS IN CONTACT WITH DISSIMILAR MATERIAL SHALL COMPLY WITH SECTION III-6 OF THE 2020 ALUMINUM DESING MANUAL.
3. ALL ALUMINUM SHEET METAL USED AT CLOSURES SHALL HAVE 3105-H14 ALLOY.
4. ALL STEEL SHEET METAL PANELS SHALL HAVE STRUCTURAL QUALITY STEEL, ASTM A-653 GRADE 50 MINIMUM, G-60 GALVANIZED STEEL DESIGNATION W/FY= 58.5 ksi (AFTER ROLLED).
5. ALL SCREWS AND ANCHORS TO BE STAINLESS STEEL 304 OR 316 AISI SERIES OR CORROSION RESISTANT COATED CARBON STEEL AS PER DIN 50018 W/ 50 ksi YIELD STRENGTH AND 90 ksi TENSILE STRENGTH & SHALL COMPLY W/ FLORIDA BUILDING CODE SECTIONS 2411.3.3.4 & 1711.
6. BOLTS TO BE ASTM A-307 GALVANIZED STEEL, OR AISI 304 SERIES STAINLESS STEEL, WITH 36 ksi MINIMUM YIELD STRENGTH.
7. ANCHORS SHALL BE AS FOLLOWS, AS PER SPECIFICATIONS OF SHEET 1A
8. PANELS MAY ALSO BE INSTALLED HORIZONTALLY FOLLOWING INSTALLATION DETAILS SHOWN ON SECTION 3 THROUGH 10 (SHEETS 4 THROUGH 6) EXCEPT THAT HEADERS ② & ③ SHALL NOT BE USED.
9. IT SHALL BE THE RESPONSIBILITY OF THE CONTRACTOR TO VERIFY THE SOUNDNESS OF THE STRUCTURE WHERE SHUTTER IS TO BE ATTACHED TO INSURE PROPER ANCHORAGE. THIS SHUTTER SHALL ONLY BE ATTACHED TO CONCRETE, BLOCK OR WOOD FRAME BUILDINGS.
10. EACH REGULAR STORM PANEL WITH LENGTHS OVER 8'-8 THROUGH 12'-4", AS PER SECTIONS 6, 8, 9 & 10 AND ALTERNATIVES 8W, 9W & 10W ON SHEETS 5, 6 & 12 RESPECTIVELY; SHALL HAVE A LEGIBLE AND READILY VISIBLE MARKING INSTRUCTING OWNER OR TENANT TO SECURE PANELS WITH APPLICABLE REINFORCEMENT DURING PERIODS OF HURRICANE WARNING.
11. THE INSTALLATION CONTRACTOR IS TO SEAL/CAULK ALL SHUTTER COMPONENT EDGES WHICH REMAIN IN CONTINUOUS CONTACT WITH THE BUILDING TO PREVENT WIND/RAIN INTRUSION.
12. STORM PANEL INSTALLATION SHALL COMPLY WITH SPECS INDICATED IN THIS DRAWING PLUS ANY BUILDING AND ZONING REGULATIONS PROVIDED BY THE JURISDICTION WHERE PERMIT IS APPLIED TO.
13. (a) THIS PRODUCT EVALUATION DOCUMENT (P.E.D.) PREPARED BY THIS ENGINEER IS GENERIC AND DOES NOT PROVIDE INFORMATION FOR A SITE SPECIFIC PROJECT; i.e. WHERE THE SITE CONDITIONS DEVIATE FROM THE P.E.D.

    (b) CONTRACTOR TO BE RESPONSIBLE FOR THE SELECTION, PURCHASE AND INSTALLATION INCLUDING LIFE SAFETY OF THIS PRODUCT BASED ON THIS P.E.D. PROVIDED HE/SHE DOES NOT DEVIATE FROM THE CONDITIONS DETAILED ON THIS DOCUMENT. CONSTRUCTION SAFETY AT SITE IS THE CONTRACTOR'S RESPONSIBILITY.

    (c) THIS PRODUCT EVALUATION DOCUMENT WILL BE CONSIDERED INVALID IF MODIFIED.

    (d) SITE SPECIFIC PROJECTS SHALL BE PREPARED BY A FLORIDA REGISTERED ENGINEER OR ARCHITECT WHICH WILL BECOME THE ENGINEER OF RECORD (E.O.R.) FOR THE PROJECT AND WHO WILL BE RESPONSIBLE FOR THE PROPER USE OF THE P.E.D. ENGINEER OF RECORD, ACTING AS A DELEGATED ENGINEER TO THE P.E.D. ENGINEER, SHALL SUBMIT TO THIS LATTER THE SITE SPECIFIC DRAWINGS FOR REVIEW.

    (e) THIS P.E.D. SHALL BEAR THE DATE AND ORIGINAL SEAL AND SIGNATURE OF THE PROFESSIONAL ENGINEER OF RECORD THAT PREPARED IT.
14. SHUTTER MANUFACTURER'S LABEL SHALL BE LOCATED ON A READILY VISIBLE LOCATION AT STORM PANEL SHUTTER IN ACCORDANCE WITH SECTION 1709.9.3 OF FLORIDA BUILDING CODE. ONE LABEL SHALL BE PLACED FOR EVERY OPENING. LABELING TO COMPLY WITH SECTION 1709.9.2 OF THE FLORIDA BUILDING CODE.

THIS DRAWING SHALL ONLY BE USED TO OBTAIN PERMITS IN THE STATE OF FLORIDA

FLORIDA BUILDING CODE (High Velocity Hurricane Zone)

WALTER A. TILLIT JR. LICENSE No. 44167 STATE OF FLORIDA PROFESSIONAL ENGINEER

7/2/2026

P.E. SEAL/SIGNATURE/DATE

©2026 TILTECO, INC.

TILTECO INC.
TILLIT TESTING & ENGINEERING COMPANY
6355 N.W. 36th. St., Ste. 305, VIRGINIA GARDENS, Fl. 33166
Phone : (305) 871-1530 . Fax : (305) 871-1531
CA-0006719
WALTER A. TILLIT Jr., P.E.
FLORIDA Lic. # 44167

20 GAGE GALVANIZED STEEL STORM PANEL

GLOBAL PROTECTION PRODUCTS, LLC.
4800 S.W. 51 STREET
DAVIE, FL. 33314
PHONE: (954)689-7545, FAX: (954)689-8797

REV. No	DESCRIPTION	DATE	REV. No	DESCRIPTION	DATE
1	OLD 23-194	6/25/26	3	–	–
2			4	–	–

W.H.
DRAWN BY:

6/25/2026
DATE:

26-070
DRAWING No:

SHEET 1 OF 26

ANCHOR SCHEDULE *

ANCHOR NAME	MANUFACTURED BY:	ANCHOR DIMENSIONS	MIN. EMBEDMENT				MIN. E.D			
			CONCRETE	GROUT FILLED	HOLLOW BLOCK	WOOD	CONCRETE	GROUT FILLED	HOLLOW BLOCK	WOOD
ULTRACON+ OR ULTRACON SS4	DEWALT	1/4"Ø	1 3/4"	–	1 1/4"	1 1/2"	2 1/2"	–	2 1/2"	SEE NOTE 5
PANELMATE FEMALE ID	ELCO CONSTRUCTION PRODUCTS	#14–10	2"	–	1 1/4"	1 7/8"	2 1/2"	–	3"	–
PANELMATE PLUS	ELCO CONSTRUCTION PRODUCTS	#14–10	2"	–	1 1/4"	1 7/8"	2 1/2"	–	3"	–
LAG SCREW	N.S.D	1/4"Ø	–	–	–	1 1/2"	–	–	–	SEE NOTE 5
SOLID SET 1/4" SCREW CS.	THE HILLMAN GROUP, INC.	1/4"Ø	1 3/4"	1 3/4"	1 1/4"	1 1/2"	3"	3"	3"	0.75"
SOLID SET #14 FEMALE ANCHOR CS.	THE HILLMAN GROUP, INC.	1/4"Ø	1 3/4"	1 3/4"	1 1/4"	1 1/2"	3"	3"	3"	0.75"
SOLID SET 1/4" SCREW 410 SS.	THE HILLMAN GROUP, INC.	1/4"Ø	1 3/4"	1 3/4"	1 1/4"	1 1/2"	3"	3"	3"	0.75"
SOLID SET #14 MALE ANCHOR CS.	THE HILLMAN GROUP, INC.	1/4"Ø	1 3/4"	1 3/4"	1 1/4"	1 1/2"	3"	3"	3"	0.75"
SOLID SET #14 MALE ANCHOR 304 SS.	THE HILLMAN GROUP, INC.	1/4"Ø	1 3/4"	1 3/4"	1 1/4"	1 1/2"	3"	3"	3"	0.75"

* NOTES:

1. CONCRETE TO BE:
   3192 psi FOR: TAPCON

   3000 Psi FOR: ALL POINT SOLID SET/ CALK–IN / THE HILLMAN SOLID SET SCREW CS / THE HILLMAN SOLID SET FEMALE CS /THE HILLMAN SOLID SET SCREW 410 SS/ THE HILLMAN SOLID SET MALE CS / THE HILLMAN SOLID SET MALE 304 SS

   3350 psi FOR: ELCO PANELMATE FEMALE/ ELCO PANELMATE PLUS

2. HOLLOW BLOCK & GROUT BLOCK TO BE ASTM C–90

3. WOOD TO BE SOUTHERN PINE #2 W/ G=0.55

4. ALL CARBON STEEL CREW ANCHORS SHALL BE SAE 1022 PER SAE J1933. ALL STAINLESS STEEL SCREW ANCHORS SHALL BE SERIES 410 OR SERIES 304 AS SPECIFIED HEREIN. CARBON STEEL SCREWS SHALL HAVE THE FOLLOWING CORROSION–PROTECTIVE COATINGS:

   BASE COAT: GALVANIZED
   TOP COAT: ORGANIC COATING (COLOR MAY VARY) SEE GENERAL NOTE 5 ON SHEET 1.

5. AS SHOWN ON SHEETS 10, 11, 12, 15, 19 & 20. MUST BE GALVANIZED STEEL W/ 1000 hrs PER ASTM B–117.

6. E.D & EMBEDMENT FOR CONCRETE & MASONRY ANCHORS ARE MEASURED BEYOND ANY FINISH. IN CASE THAT PRECAST STONE, PRECAST CONCRETE PANELS, PAVERS, STUCCO OR WOOD BOARDS BE FOUND ON THE EXISTING WALL OR FLOOR, ANCHORS SHALL BE LONG ENOUGH TO REACH THE MAIN STRUCTURE BEHIND SUCH PANELS.

7. ANCHORS SHALL BE INSTALLED IN ACCORDANCE WITH THE ANCHOR MANUFACTURER'S SPECIFICATIONS & INSTRUCTIONS. ONLY STAINLESS STEEL ANCHORS ARE ALLOWED AT INSTALLATIONS WITHIN 300 ft FROM COASTAL SHORELINE.

8. ALL GROUT SHALL BE MIN. f'c=2ksi.

WALTER A. TILLIT JR. LICENSE No. 44167 STATE OF FLORIDA PROFESSIONAL ENGINEER

P.E. SEAL/SIGNATURE/DATE

FLORIDA BUILDING CODE (High Velocity Hurricane Zone)

©2026 TILTECO, INC.

TILTECO INC.
TILLIT TESTING & ENGINEERING COMPANY
6355 N.W. 36th. St., Ste. 305, VIRGINIA GARDENS, Fl. 33166
Phone : (305) 871–1530 . Fax : (305) 871–1531
CA–0006719
WALTER A. TILLIT Jr., P.E.
FLORIDA Lic. # 44167

20 GAGE GALVANIZED STEEL STORM PANEL

GLOBAL PROTECTION PRODUCTS, LLC.
4800 S.W. 51 STREET
DAVIE, FL. 33314
PHONE: (954)689–7545, FAX: (954)689–8797

REV. No	DESCRIPTION	DATE	REV. No	DESCRIPTION	DATE
1	OLD 23–194	6/25/26	3	–	–
2			4	–	–

W.H.
DRAWN BY:

6/25/2026
DATE:

26–070
DRAWING No:

SHEET 1A OF 26

COMPONENTS FOR REGULAR & LIFE SAFETY STORM PANELS

(SCALE 1/2=1")

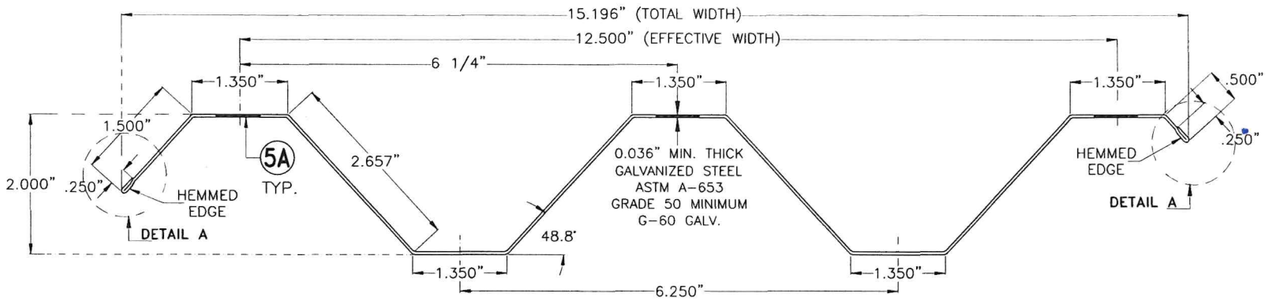

① STORM PANEL

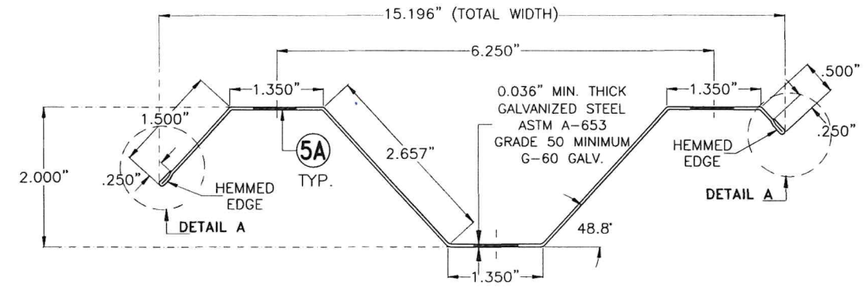

1A END STORM PANEL

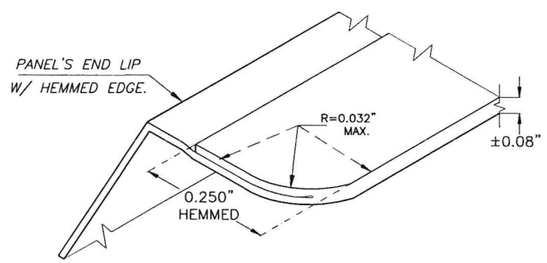

ISOMETRIC VIEW DETAIL A

ROUNDED CORNER @ ENDS OF PANEL'S END LIP W/ HEMMED EDGE.
(N.T.S)

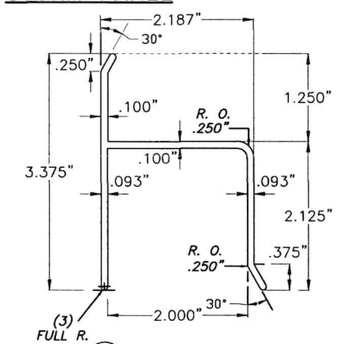

② "h" HEADER

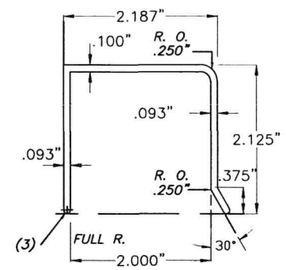

③ "U" HEADER

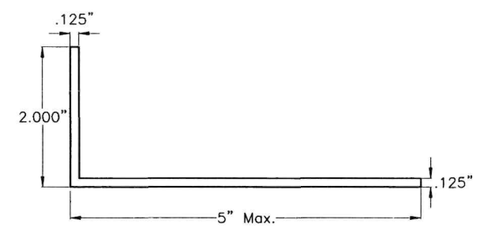

④ ANGLE

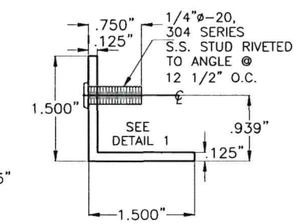

4A ANGLE WITH STUD

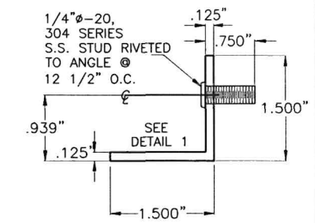

4B ANGLE WITH REVERSE STUD

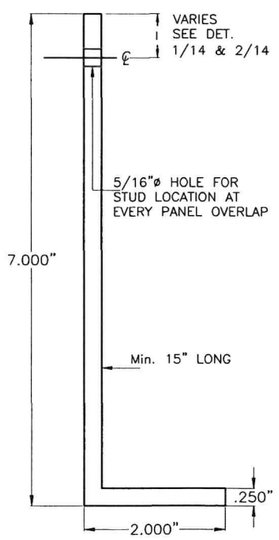

⑧ 2"X7"X1/4" ALUMINUM ANGLE

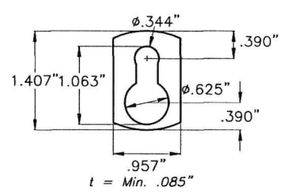

⑤ KEY HOLE WASHER

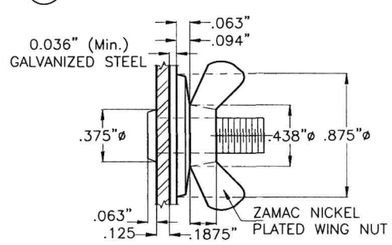

DETAIL 1
SCALE: 1"=1"

ALTERNATIVELY, USE WING NUT W/OUT MONOLITHIC WASHER W/ ADDITIONAL * 7/8"øx3/32" WASHER (STAINLESS STEEL OR NICKEL PLATED STEEL).

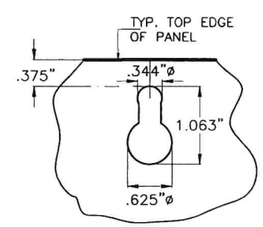

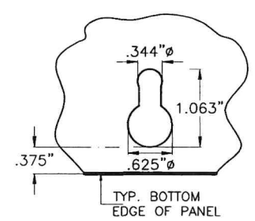

5A KEY HOLE AT PANEL

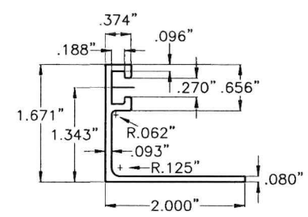

⑥ "F" TRACK ANGLE

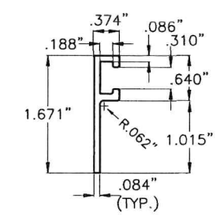

6A 3/8" "F" TRACK

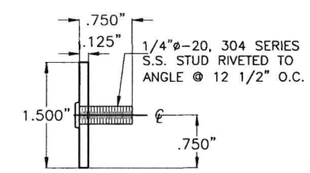

⑦ FLAT PLATED WITH STUD

WALTER A. TILLIT JR. LICENSE No. 44167 STATE OF FLORIDA PROFESSIONAL ENGINEER

7/7/2026

P.E. SEAL/SIGNATURE/DATE

©2026 TILTECO, INC.

TILTECO INC.
TILLIT TESTING & ENGINEERING COMPANY
6355 N.W. 36th. St., Ste. 305, VIRGINIA GARDENS, Fl. 33166
Phone : (305) 871-1530 . Fax : (305) 871-1531
CA-0006719
WALTER A. TILLIT Jr., P.E.
FLORIDA Lic. # 44167

FLORIDA BUILDING CODE (High Velocity Hurricane Zone)

20 GAGE GALVANIZED STEEL STORM PANEL

GLOBAL PROTECTION PRODUCTS, LLC.
4800 S.W. 51 STREET
DAVIE, FL. 33314
PHONE: (954)689-7545, FAX: (954)689-8797

W.H. DRAWN BY:
6/25/2026 DATE:
26-070 DRAWING No:

REV. No	DESCRIPTION	DATE	REV. No	DESCRIPTION	DATE
1	OLD 23-194	6/25/26	3	–	–
2			4	–	–

SHEET 2 OF 26

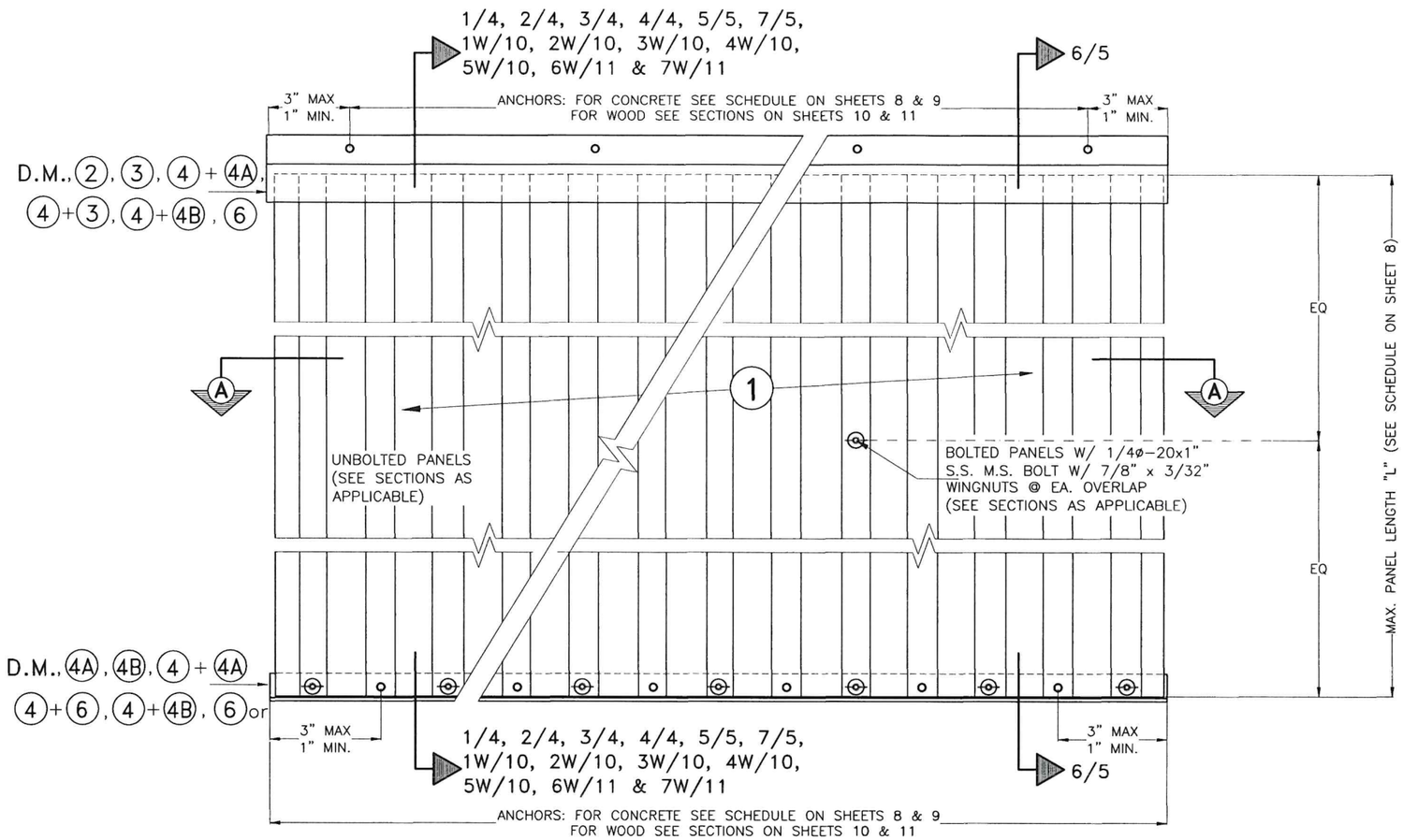

REGULAR STORM PANELS 1 & 1A ELEVATION

N.T.S.

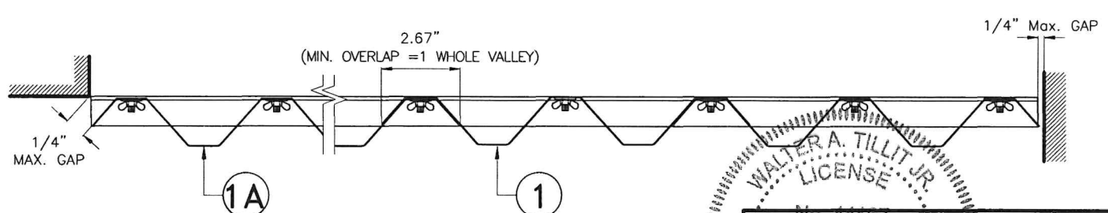

SECTION A-A

N.T.S.

WALTER A. TILLIT JR
LICENSE
No. 44167
STATE OF
FLORIDA
PROFESSIONAL ENGINEER

P.E. SEAL/SIGNATURE/DATE

FLORIDA BUILDING CODE (High Velocity Hurricane Zone)

©2026 TILTECO, INC.

TILTECO INC.
TILLIT TESTING & ENGINEERING COMPANY
6355 N.W. 36th. St., Ste. 305, VIRGINIA GARDENS, Fl. 33166
Phone : (305) 871-1530 . Fax : (305) 871-1531
CA-0006719
WALTER A. TILLIT Jr., P.E.
FLORIDA Lic. # 44167

20 GAGE GALVANIZED STEEL STORM PANEL

GLOBAL PROTECTION PRODUCTS, LLC.
4800 S.W. 51 STREET
DAVIE, FL. 33314
PHONE: (954)689-7545, FAX: (954)689-8797

REV. No	DESCRIPTION	DATE	REV. No	DESCRIPTION	DATE
1	OLD 23-194	6/25/26	3	–	–
2			4	–	–

W.H.
DRAWN BY:

6/25/2026
DATE:

26-070
DRAWING No:

SHEET 3 OF 26

INSTALLATION DETAILS FOR REGULAR PANELS (1) & (1A) INTO EXISTING POURED CONCRETE OR CONCRETE BLOCK STRUCTURES

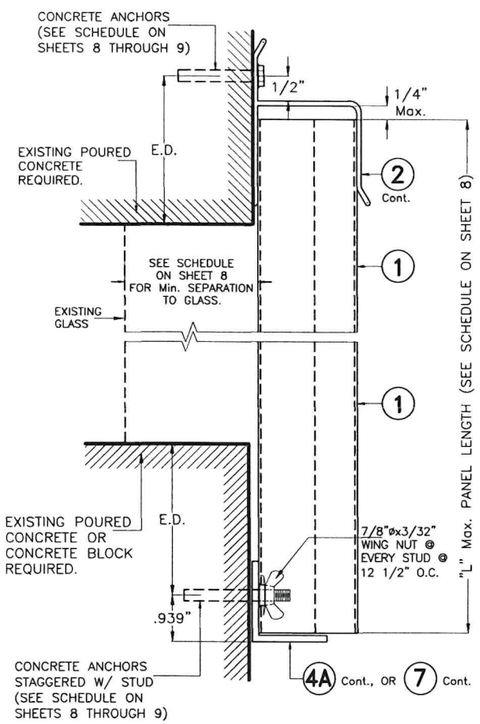

WALL MOUNTING SECTION 1

SCALE 3/8=1"

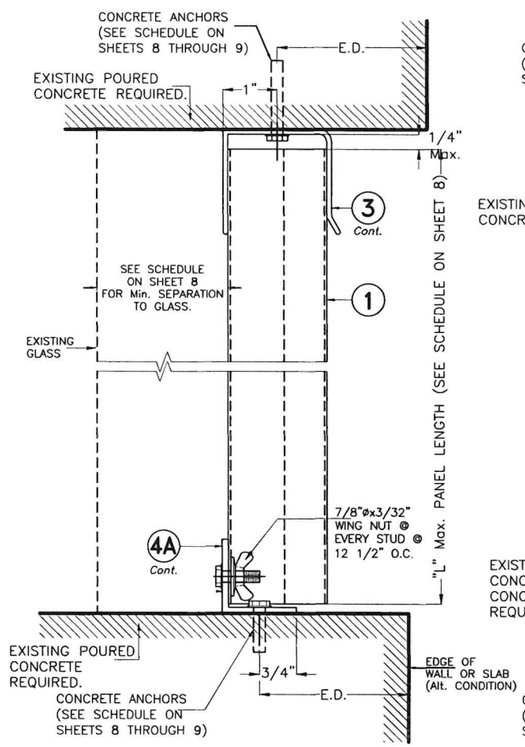

CEILING AND FLOOR MOUNTING SECTION 2

SCALE 3/8=1"

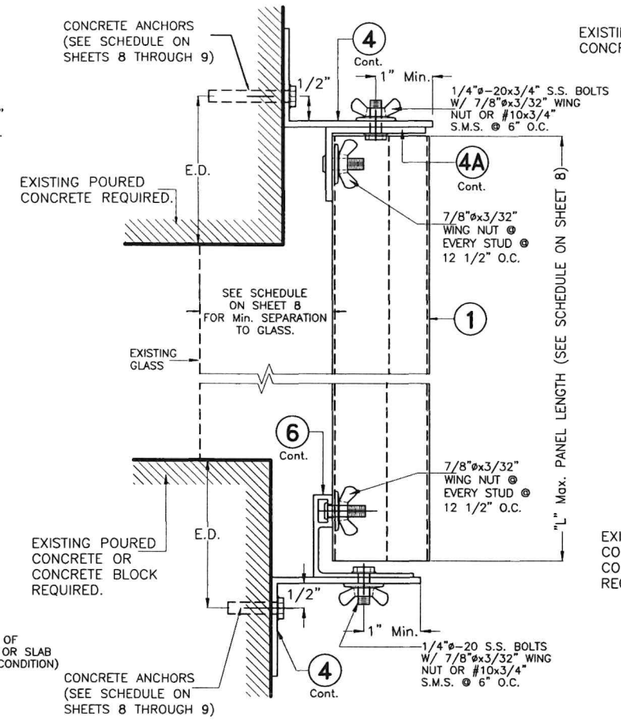

BUILD OUT MOUNTING SECTION 3

SCALE 3/8=1"

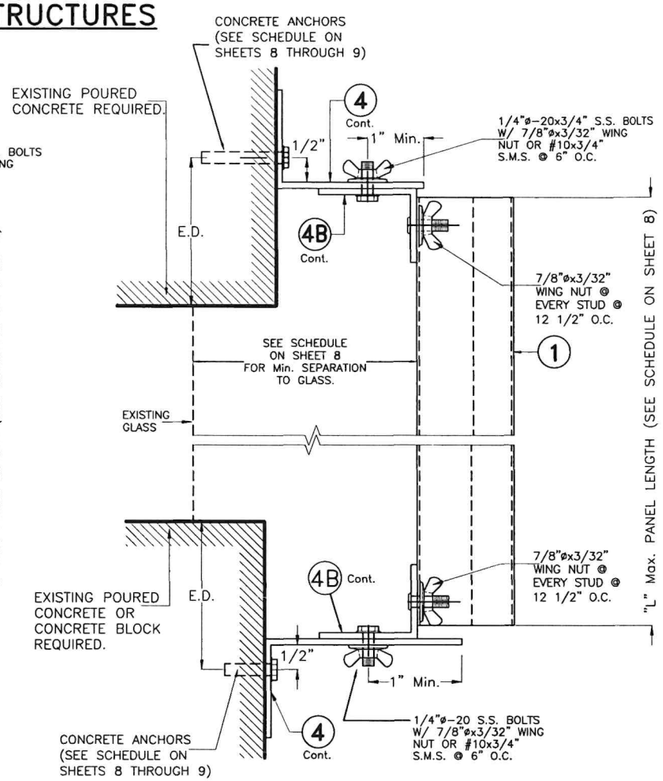

ALTERNATE BUILD OUT MOUNTING SECTION 4

SCALE 3/8=1"

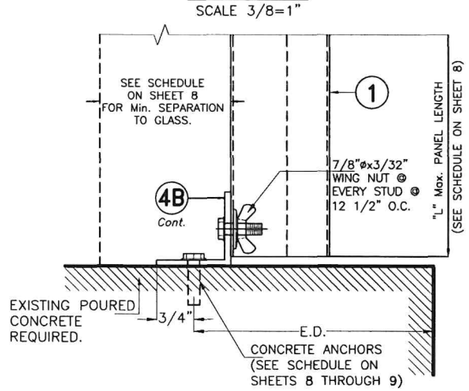

CEILING AND FLOOR MOUNTING SECTION 2A

SCALE 3/8=1"

E.D. = EDGE DISTANCE (SEE SCHEDULE ON SHEETS 8, 9 & 1A)

NOTE FOR COMBINATION OF SECTIONS:

TOP & BOTTOM MOUNTINGS CAN BE COMBINED IN ANY WAY TO SUIT ANY INSTALLATION.

FLORIDA BUILDING CODE (High Velocity Hurricane Zone)

WALTER A. TILLIT JR. LICENSE No. 44167 STATE OF FLORIDA PROFESSIONAL ENGINEER

P.E. SEAL/SIGNATURE/DATE

©2026 TILTECO, INC.

TILTECO INC.
TILLIT TESTING & ENGINEERING COMPANY
6355 N.W. 36th. St., Ste. 305, VIRGINIA GARDENS, Fl. 33166
Phone : (305) 871-1530 . Fax : (305) 871-1531
CA-0006719
WALTER A. TILLIT Jr., P.E.
FLORIDA Lic. # 44167

20 GAGE GALVANIZED STEEL STORM PANEL

GLOBAL PROTECTION PRODUCTS, LLC.
4800 S.W. 51 STREET
DAVIE, FL. 33314
PHONE: (954)689-7545, FAX: (954)689-8797

REV. No	DESCRIPTION	DATE	REV. No	DESCRIPTION	DATE
1	OLD 23-194	6/25/26	3	–	–
2			4	–	–

W.H.
DRAWN BY:

6/25/2026
DATE:

26-070
DRAWING No:

SHEET 4 OF 26

INSTALLATION DETAILS FOR REGULAR PANELS (1) & (1A) INTO EXISTING POURED CONCRETE OR CONCRETE BLOCK STRUCTURES

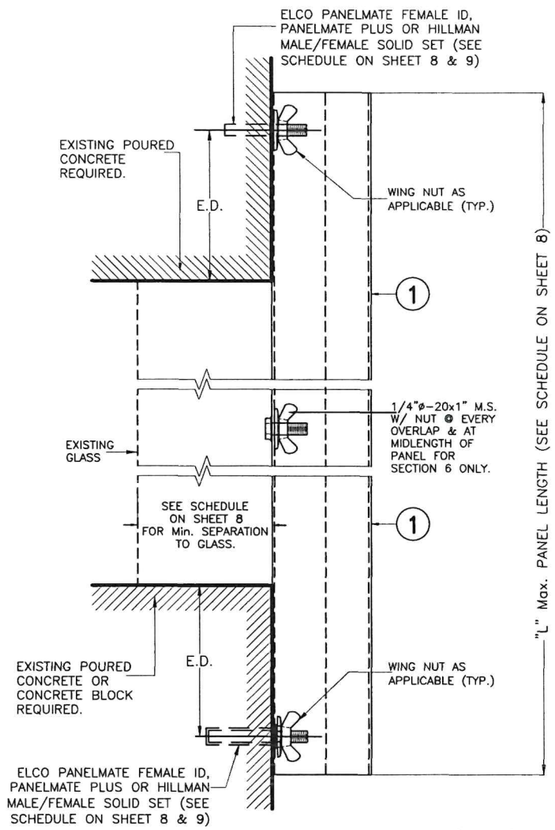

WALL MOUNTING (D.M.) SECTIONS 5 & 6

SCALE 3/8=1"

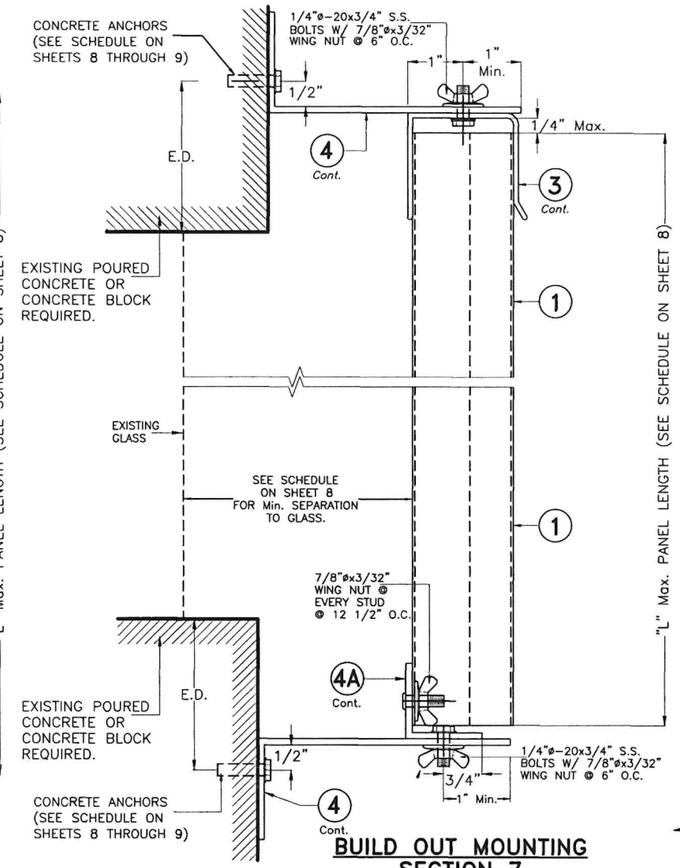

BUILD OUT MOUNTING SECTION 7

SCALE 3/8=1"

END CLOSURES DETAILS FOR INSTALLATION IN POURED CONCRETE, CONCRETE BLOCK OR WOOD

VALID FOR REGULAR, LIFE SAFETY AND E-Z HANG STORM PANEL SYSTEM

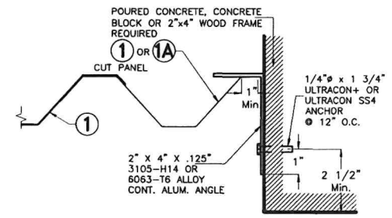

CASE A (PLAN)

SCALE 3/16=1"

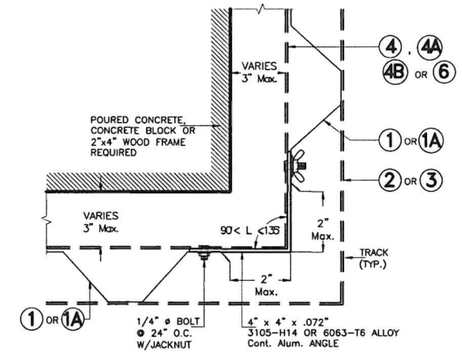

CASE B (PLAN)

SCALE 3/16=1"

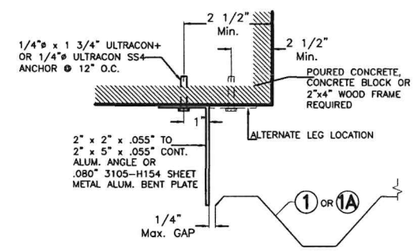

CASE C (PLAN)

SCALE 3/16=1"

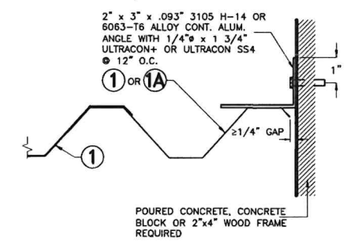

CASE D (PLAN)

SCALE 3/16=1"

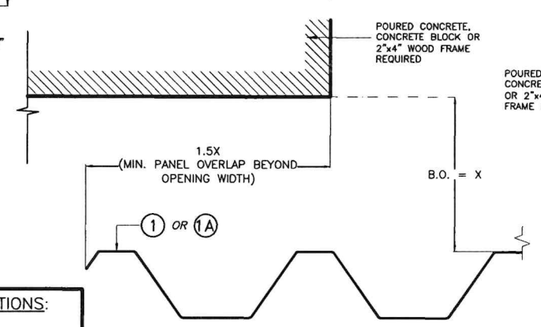

CASE E (PLAN)

SCALE 3/16=1"

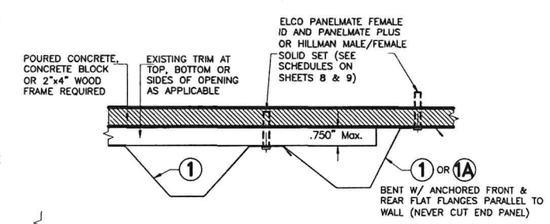

CASE F (PLAN)

SCALE 3/16=1"

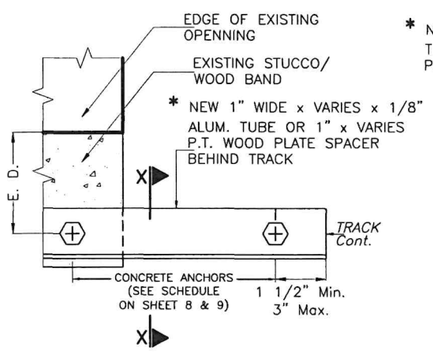

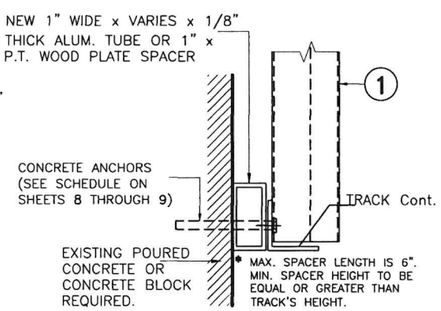

SECTION X-X

SCALE 3/8=1"

DETAIL FOR SPACERS REQUIRED AT TOP OR BOTTOM TRACKS ADJACENT TO STUCCO/WOOD BANDS

E.D. = EDGE DISTANCE (SEE SCHEDULE ON SHEETS 8, 9 & 1A)

NOTE FOR COMBINATION OF SECTIONS:

TOP & BOTTOM MOUNTINGS CAN BE COMBINED IN ANY WAY TO SUIT ANY INSTALLATION.

FLORIDA BUILDING CODE (High Velocity Hurricane Zone)

WALTER A. TILLIT JR. LICENSE No. 44167 STATE OF FLORIDA PROFESSIONAL ENGINEER

7/2/2026

P.E. SEAL/SIGNATURE/DATE

©2026 TILTECO, INC.

TILTECO INC.
TILLIT TESTING & ENGINEERING COMPANY
6355 N.W. 36th. St., Ste. 305, VIRGINIA GARDENS, FL 33166
Phone : (305) 871-1530 , Fax : (305) 871-1531
CA-0006719
WALTER A. TILLIT Jr., P.E.
FLORIDA Lic. # 44167

20 GAGE GALVANIZED STEEL STORM PANEL

GLOBAL PROTECTION PRODUCTS, LLC.
4800 S.W. 51 STREET
DAVIE, FL. 33314
PHONE: (954)689-7545, FAX: (954)689-8797

REV. No	DESCRIPTION	DATE	REV. No	DESCRIPTION	DATE
1	OLD 23-194	6/25/26	3	–	–
2			4	–	–

W.H.
DRAWN BY:

6/25/2026
DATE:

26-070
DRAWING No:

INSTALLATION DETAILS FOR REGULAR PANELS (1) & (1A) INTO EXISTING POURED CONCRETE OR CONCRETE BLOCK STRUCTURES

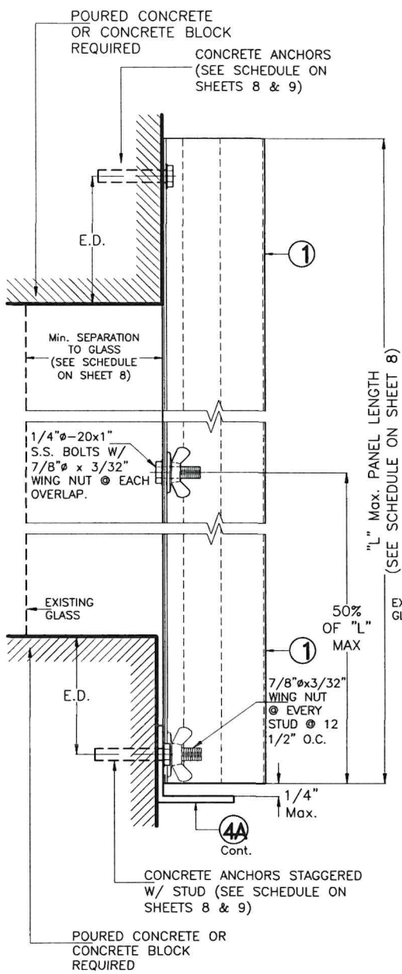

DIRECT AND WALL MOUNTING INSTALLATION SECTION 8

SCALE 3/8=1"

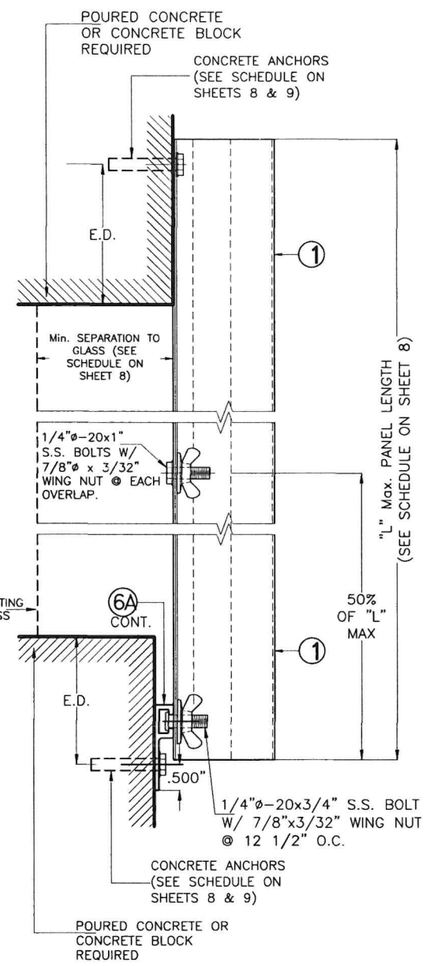

DIRECT AND WALL MOUNTING INSTALLATION SECTION 9

SCALE 3/8=1"

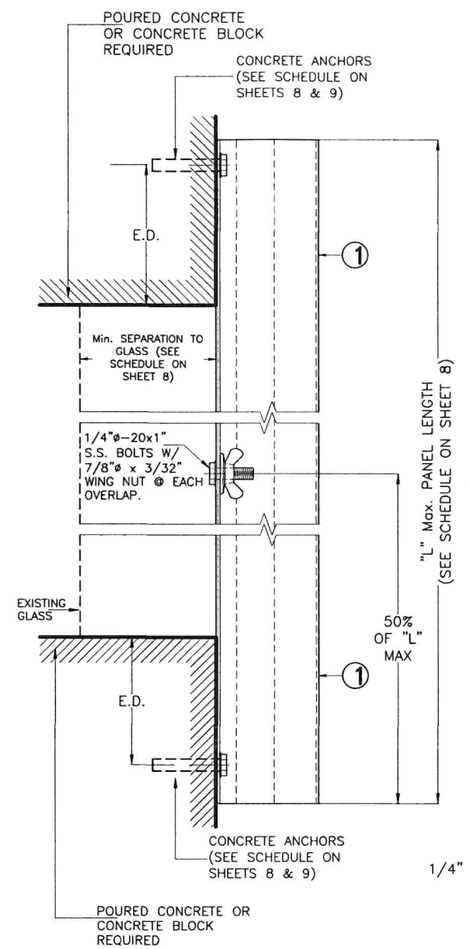

DIRECT MOUNTING INSTALLATION SECTION 10

SCALE 3/8=1"

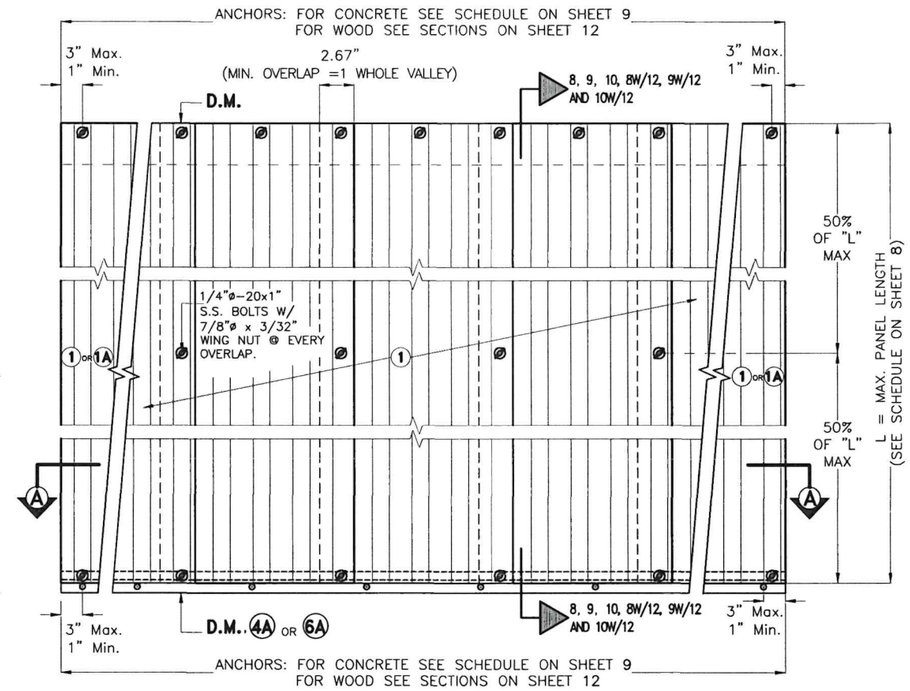

REGULAR STORM PANELS (1) & (1A) ELEVATION

SCALE 3/32"=1"

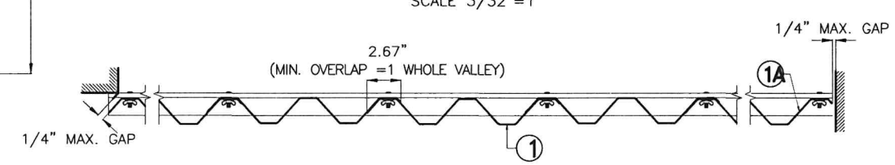

SECTION A-A (Typ.)

SCALE 3/32"=1"

E.D. = EDGE DISTANCE (SEE SCHEDULE ON SHEETS 1A, 8 & 9)

NOTE FOR COMBINATION OF SECTIONS:

TOP & BOTTOM MOUNTINGS CAN BE COMBINED IN ANY WAY TO SUIT ANY INSTALLATION.

WALTER A. TILLIT JR. LICENSE No. 44167 STATE OF FLORIDA PROFESSIONAL ENGINEER

7/2/2026

P.E. SEAL/SIGNATURE/DATE

FLORIDA BUILDING CODE (High Velocity Hurricane Zone)

©2026 TILTECO, INC.

TILTECO INC.
TILLIT TESTING & ENGINEERING COMPANY
6355 N.W. 36th. St., Ste. 305, VIRGINIA GARDENS, Fl. 33166
Phone : (305) 871-1530 . Fax : (305) 871-1531
CA-0006719
WALTER A. TILLIT Jr., P.E.
FLORIDA Lic. # 44167

20 GAGE GALVANIZED STEEL STORM PANEL

GLOBAL PROTECTION PRODUCTS, LLC.
4800 S.W. 51 STREET
DAVIE, FL. 33314
PHONE: (954)689-7545, FAX: (954)689-8797

REV. No	DESCRIPTION	DATE	REV. No	DESCRIPTION	DATE
1	OLD 23-194	6/25/26	3	–	–
2			4	–	–

W.H.
DRAWN BY:

6/25/2026
DATE:

26-070
DRAWING No:

SHEET 6 OF 26

WALL AND FLOOR MOUNTING INSTALLATION FOR SPLIT PANELS

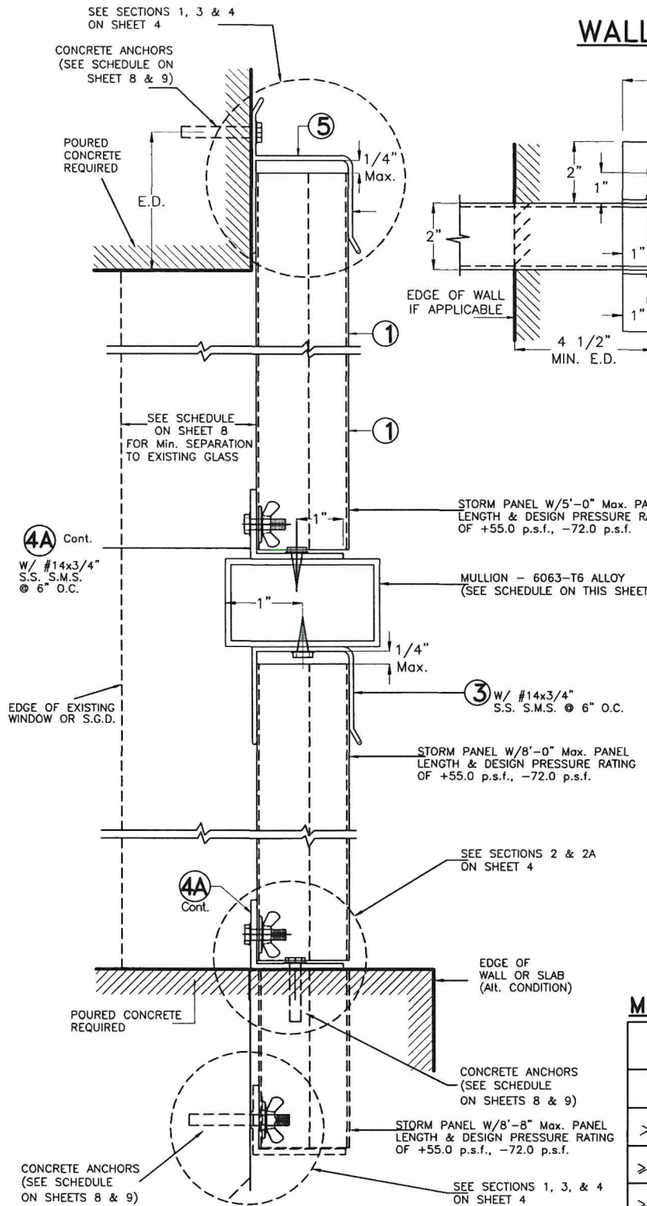

SECTION 1
SCALE 3/8=1"

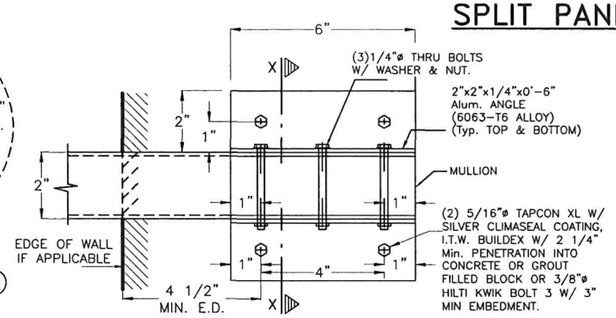

ELEVATION
SCALE: 1/4" = 1"

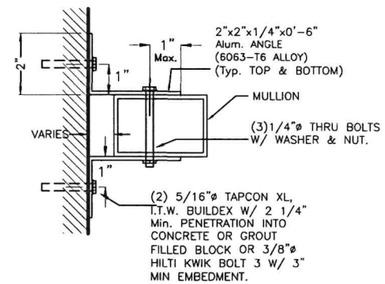

SECTION X-X
SCALE: 1/4" = 1"

DETAIL 1

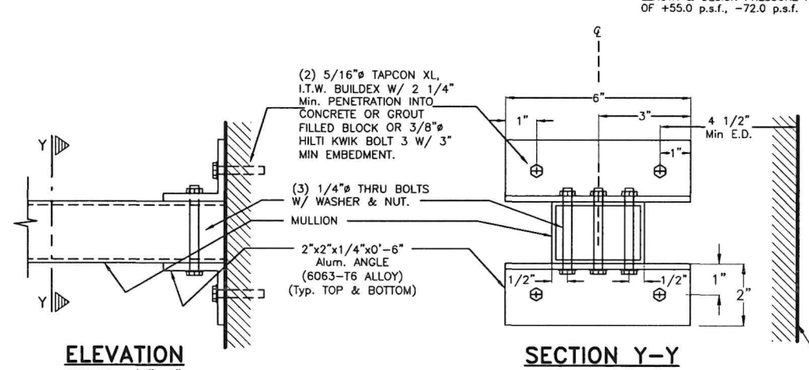

ELEVATION
SCALE 1/4"=1"

SECTION Y-Y
SCALE 1/4"=1"

DETAIL 2

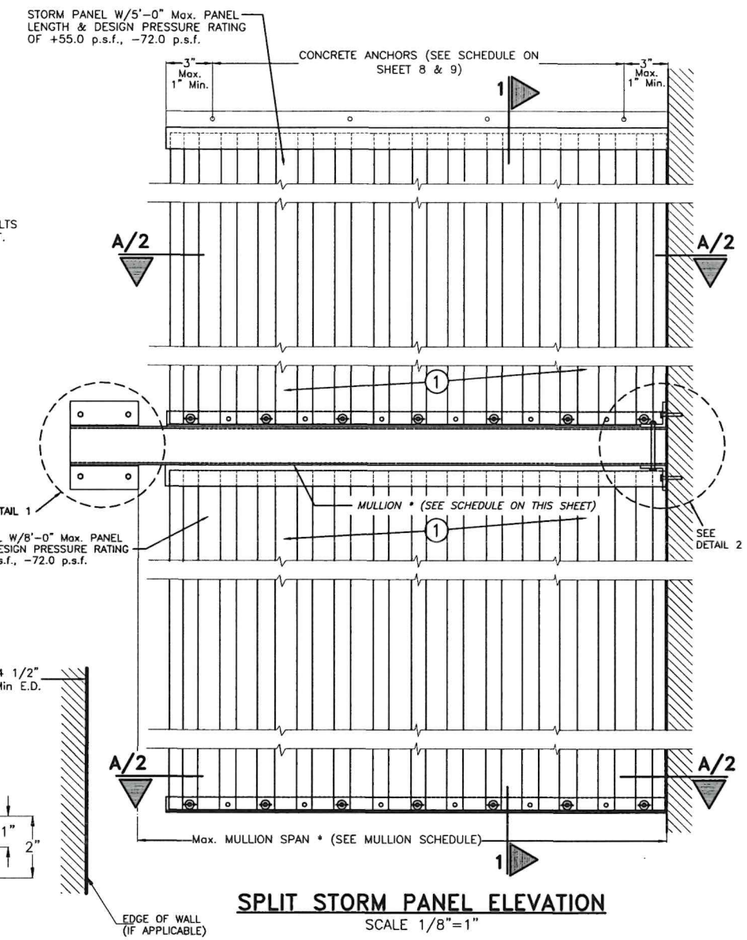

SPLIT STORM PANEL ELEVATION
SCALE 1/8"=1"

MULLION SCHEDULE

Max. MULLION SPAN (Ft.) *	REQUIRED Min. TUBE MULLION **
⩽ 4'-6"	2" x 3" x 1/8"
> 4'-6" TO 5'-8"	2" x 4" x 1/8"
⩾ 5'-8" TO 6'-10"	2" x 5" x 1/8", 2" x 4" x 1/4"
⩾ 6'-10" TO 8'-0"	2" x 6" x 1/8"

* SPANS VALID FOR A.S.D. DESIGN PRESSURE RATING UP TO +55.0 p.s.f., -72.0 p.s.f.

** MINIMUM TUBE'S DIMENSION SHALL BE ORIENTED PARALLEL TO STORM PANEL'S LENGTH.

NOTE: MULLION CAN ALSO BE INSTALLED W/O STORM PANELS ON TOP OR BOTTOM SO THAT IT IS LOCATED AT TOP OR BOTTOM OF OPENING. (ONE PANEL OPENING W/ TUBE TOP & BOTTOM)

WALTER A. TILLIT JR. LICENSE No. 44167 STATE OF FLORIDA PROFESSIONAL ENGINEER

P.E. SEAL/SIGNATURE/DATE

©2026 TILTECO, INC.

TILTECO INC.
TILLIT TESTING & ENGINEERING COMPANY
6355 N.W. 36th. St., Ste. 305, VIRGINIA GARDENS, FL 33166
Phone : (305) 871-1530 . Fax : (305) 871-1531
CA-0006719
WALTER A. TILLIT Jr., P.E.
FLORIDA Lic. # 44167

FLORIDA BUILDING CODE (High Velocity Hurricane Zone)

20 GAGE GALVANIZED STEEL STORM PANEL

GLOBAL PROTECTION PRODUCTS, LLC.
4800 S.W. 51 STREET
DAVIE, FL. 33314
PHONE: (954)689-7545, FAX: (954)689-8797

REV. No	DESCRIPTION	DATE	REV. No	DESCRIPTION	DATE
1	OLD 23-194	6/25/26	3	-	-
2			4	-	-

W.H.
DRAWN BY:

6/25/2026
DATE:

26-070
DRAWING No:

SHEET 7 OF 26

MAXIMUM A.S.D. DESIGN PRESSURE RATING (p.s.f.) AND CORRESPONDING MAXIMUM PANEL LENGTH "L" SCHEDULE

(VALID ONLY FOR PANELS (1) & (1A) INSTALLATIONS AS PER SECTIONS 1 THRU 10, ON SHEETS 4, 5 & 6)

MAXIMUM A.S.D. DESIGN PRESSURE RATING (p.s.f.)	Max. PANEL LENGTH L (ft.) (SEE SECTIONS)	MINIMUM SEPARATION TO GLASS	PANEL CONDITION	APPLICABLE TO SECTIONS # AND ANY COMBINATION OF THEM
+55.5, −72.0	7'−5" OR LESS	2 1/4"	UNBOLTED	1 THRU 5 & 7
+55.5, −72.0	>7'−5" TO 8'−8" Max.	2 3/4"	UNBOLTED	1 THRU 5 & 7
+55.0, −72.0	>8'−8" TO 11'−2" Max.	2 1/2"	* BOLTED AT MIDLENGTH AT OVERLAPS	6
+43.8, −48.0	12'−4" OR LESS	3 1/2"	* BOLTED AT MIDLENGTH AT OVERLAPS	8, 9 & 10

* BOLTED W/ 1/4"ø−20x1" S.S. M.S. & WINGNUT AT OVERLAP & MIDLENGTH OF PANEL.

MAXIMUM A.S.D. DESIGN PRESSURE RATING (p.s.f.) AND CORRESPONDING MAXIMUM ANCHOR SPACING SCHEDULE FOR REGULAR STORM PANELS (1) & (1A) INSTALLATIONS INTO EXISTING CONCRETE & CONCRETE BLOCK STRUCTURES

(VALID ONLY FOR PANELS (1) & (1A) INSTALLATIONS AS PER SECTIONS 1 THRU 7, ON SHEETS 4 & 5)

MAXIMUM A.S.D DESIGN PRESSURE RATING (p.s.f.)	MAXIMUM ANCHORS SPACING FOR E.D. = 3 1/2" **																					APPLICABLE TO SECTIONS # & ANY COMBINATION OF THEM	MAXIMUM PANEL LENGTH "L" (ft.)
	ULTRACON+ OR ULTRACON SS4		ELCO PANELMATE FEMALE ID		ELCO PANELMATE PLUS		HILLMAN SOLID SET 1/4" SCREW CS			HILLMAN SOLID SET #14 FEMALE CS.			HILLMAN SOLID SET 1/4" SCREW 410 SS.			HILLMAN SOLID SET #14 MALE CS.			HILLMAN SOLID SET #14 MALE 304 SS.				
	TO CONCRETE	TO CONCRETE BLOCK	TO CONCRETE	TO CONCRETE BLOCK	TO CONCRETE	TO CONCRETE BLOCK	TO CONCRETE	GROUT FILLET	TO CONCRETE BLOCK	TO CONCRETE	GROUT FILLET	TO CONCRETE BLOCK	TO CONCRETE	GROUT FILLET	TO CONCRETE BLOCK	TO CONCRETE	GROUT FILLET	TO CONCRETE BLOCK	TO CONCRETE	GROUT FILLET	TO CONCRETE BLOCK		
+55.5, −72.0 OR LESS	6"	N/A	6"	N/A	6"	N/A	6"	N/A	N/A	6"	N/A	N/A	6"	N/A	N/A	6"	N/A	N/A	6"	N/A	N/A	1 (TOP)	7'−5" OR LESS
	6"	5"	6"	6"	6"	6"	6"	6"	6"	6"	6"	6"	6"	6"	6"	6"	6"	6"	6"	6"	4"	1 (BOTTOM)	
	6"	N/A	6"	N/A	6"	N/A	6"	N/A	N/A	6"	N/A	N/A	6"	N/A	N/A	6"	N/A	N/A	6"	N/A	N/A	2 (TOP)	
	6"	N/A	5"	N/A	5"	N/A	6"	N/A	N/A	6"	N/A	N/A	6"	N/A	N/A	6"	N/A	N/A	6"	N/A	N/A	2 (BOTTOM)	
	6"	N/A	6"	N/A	6"	N/A	6"	N/A	N/A	6"	N/A	N/A	6"	N/A	N/A	6"	N/A	N/A	6"	N/A	N/A	3 & 4 (TOP)	
	6"	5"	6"	6"	6"	6"	6"	6"	6"	6"	6"	6"	6"	6"	6"	6"	6"	6"	6"	6"	4"	3 (BOTTOM)	
	6"	N/A	6"	N/A	6"	N/A	6"	N/A	N/A	6"	N/A	N/A	6"	N/A	N/A	6"	N/A	N/A	6"	N/A	N/A	7 (TOP)	
	6"	5"	6"	6"	6"	6"	6"	6"	6"	6"	6"	6"	6"	6"	6"	6"	6"	6"	6"	6"	4"	4 & 7 (BOTTOM)	
	N/A	N/A	6 1/4"	6 1/4"	6 1/4"	6 1/4"	N/A	N/A	N/A	6 1/4"	6 1/4"	6 1/4"	N/A	N/A	N/A	6 1/4"	6 1/4"	6 1/4"	6 1/4"	6 1/4"	N/A	5 (TOP/BOTTOM)	

SEE SHEETS 10 & 11 FOR ANCHORS TYPE & SPACING FOR INSTALLATIONS INTO WOOD FRAME BUILDING.
MINIMUM ANCHOR SPACINGS AND MINIMUM EDGE DISTANCE ARE INDICATED ON THIS SCHEDULE. FOR E.D. LESS THAN INDICATED ON SCHEDULE REDUCE ANCHOR SPACING BY MULTIPLYING SPACING SHOWN ON SCHEDULE BY THE FOLLOWING FACTORS. FOR THIS OPERATION TO BE POSSIBLE, REDUCED SPACING OBTAINED USING FACTOR SHALL NOT BE LESS THAN MINIMUM SPACING INDICATED FOR EACH ANCHOR TYPE AT ANCHORS LEGEND.

ANCHOR TYPE		1/4"ø ULTRACON+ OR ULTRACON SS4	1/4"ø ELCO PANELMATE FEMALE ID	1/4"ø ELCO PANELMATE PLUS	1/4"ø HILLMAN SOLID SET 1/4" CS	1/4"ø HILLMAN SOLID SET #14 FEM,CS	1/4"ø HILLMAN SOLID SET 1/4" 410,SS	1/4"ø HILLMAN SOLID SET #14 MALE,CS	1/4"ø HILLMAN SOLID SET#14 MALE 304 SS
Min. ANCHOR SPACING (in.)		3	3	3	3	3	3	3	3
**EDGE DISTANCE (E.D. Min.)	Concrete (in.)	3	3	3	3	3	3	3	3
	Grout filled (in.)	–	–	–	3	3	3	3	3
	Concrete Block (in.)	3	3 1/2	3 1/2	3	3	3	3	3
ACTUAL E.D. (EDGE DISTANCE)		FACTOR							
1 1/2"		.35	–	–	–	–	–	–	–
2 1/2"		–	–	–	–	–	–	–	–
3"		1.00	–	1.00	–	–	–	–	–
3 1/2"		–	1.00	–	–	–	–	–	–

WALTER A. TILLIT JR. LICENSE No. 44167 STATE OF FLORIDA PROFESSIONAL ENGINEER
03/27/2026

P.E. SEAL/SIGNATURE/DATE

©2026 TILTECO, INC.

TILTECO INC.
TILLIT TESTING & ENGINEERING COMPANY
6355 N.W. 36th. St., Ste. 305, VIRGINIA GARDENS, Fl. 33166
Phone : (305) 871−1530 . Fax : (305) 871−1531
CA−0006719
WALTER A. TILLIT Jr., P.E.
FLORIDA Lic. # 44167

FLORIDA BUILDING CODE (High Velocity Hurricane Zone)

20 GAGE GALVANIZED STEEL STORM PANEL 6

GLOBAL PROTECTION PRODUCTS, LLC.
4800 S.W. 51 STREET
DAVIE, FL. 33314
PHONE: (954)689−7545, FAX: (954)689−8797

REV. No	DESCRIPTION	DATE	REV. No	DESCRIPTION	DATE
1	OLD 23−194	6/25/26	3	–	–
2			4	–	–

W.H.
DRAWN BY:

6/25/2026
DATE:

26−070
DRAWING No:

MAXIMUM A.S.D. DESIGN PRESSURE RATING (p.s.f.) AND CORRESPONDING MAXIMUM ANCHOR SPACING SCHEDULE FOR REGULAR STORM PANELS 1 & 1A INSTALLATIONS INTO EXISTING CONCRETE & CONCRETE BLOCK STRUCTURES

(VALID ONLY FOR PANELS 1 & 1A INSTALLATIONS AS PER SECTIONS 1 THRU 10, ON SHEETS 4, 5 & 6)

MAXIMUM A.S.D. DESIGN PRESSURE RATING (p.s.f.)	MAXIMUM ANCHORS SPACING FOR E.D. = 3 1/2" **																					APPLICABLE TO SECTIONS # & ANY COMBINATION OF THEM	MAXIMUM PANEL LENGTH "L" (ft.)
	ULTRACON+ OR ULTRACON SS4		ELCO PANELMATE FEMALE ID		ELCO PANELMATE PLUS		HILLMAN SOLID SET 1/4" SCREW CS			HILLMAN SOLID SET #14 FEMALE CS			HILLMAN SOLID SET 1/4" SCREW 410 SS			HILLMAN SOLID SET #14 MALE CS			HILLMAN SOLID SET #14 MALE 304 SS				
	TO CONCRETE	TO CONCRETE BLOCK	TO CONCRETE	TO CONCRETE BLOCK	TO CONCRETE	TO CONCRETE BLOCK	TO CONCRETE	GROUT FILLET	TO CONCRETE BLOCK	TO CONCRETE	GROUT FILLET	TO CONCRETE BLOCK	TO CONCRETE	GROUT FILLET	TO CONCRETE BLOCK	TO CONCRETE	GROUT FILLET	TO CONCRETE BLOCK	TO CONCRETE	GROUT FILLET	TO CONCRETE BLOCK		
+55.5,−72.0 OR LESS	6"	N/A	6"	N/A	6"	N/A	6"	N/A	N/A	6"	N/A	N/A	6"	N/A	N/A	6"	N/A	N/A	6"	N/A	N/A	1 (TOP)	>7'−5" TO 8'−8"
	6"	4"	6"	6"	6"	6"	6"	6"	6"	6"	6"	5 1/2"	6"	6"	6"	6"	6"	5 1/2"	6"	6"	3 1/2"	1 (BOTTOM)	
	6"	N/A	6"	N/A	6"	N/A	6"	N/A	N/A	6"	N/A	N/A	6"	N/A	N/A	6"	N/A	N/A	6"	N/A	N/A	2 (TOP)	
	6"	N/A	5"	N/A	5"	N/A	6"	N/A	N/A	6"	N/A	N/A	6"	N/A	N/A	6"	N/A	N/A	6"	N/A	N/A	2 (BOTTOM)	
	6"	N/A	6"	N/A	6"	N/A	6"	N/A	N/A	6"	N/A	N/A	6"	N/A	N/A	6"	N/A	N/A	6"	N/A	N/A	3 & 4 (TOP)	
	6"	4"	6"	6"	6"	6"	6"	6"	6"	6"	6"	5 1/2"	6"	6"	6"	6"	6"	5 1/2"	6"	6"	3 1/2"	3 (BOTTOM)	
	6"	N/A	6"	N/A	6"	N/A	6"	N/A	N/A	6"	N/A	N/A	6"	N/A	N/A	6"	N/A	N/A	6"	N/A	N/A	7 (TOP)	
	6"	4"	6"	6"	6"	6"	6"	6"	6"	6"	6"	5 1/2"	6"	6"	6"	6"	6"	5 1/2"	6"	6"	3 1/2"	4 & 7 (BOTTOM)	
	N/A	N/A	6 1/4"	6 1/4"	6 1/4"	6 1/4"	N/A	N/A	N/A	6 1/4"	6 1/4"	N/A	N/A	N/A	N/A	6 1/4"	6 1/4"	N/A	6 1/4"	6 1/4"	N/A	5 (TOP/BOTTOM)	
+50.0,−53.3	N/A	N/A	6 1/4"	6 1/4"	6 1/4"	6 1/4"	N/A	N/A	N/A	6 1/4"	6 1/4"	N/A	N/A	N/A	N/A	6 1/4"	6 1/4"	N/A	6 1/4"	6 1/4"	N/A	6 (TOP/BOTTOM)	>8'−8" TO 11'−2"
+55.0,−72.0	N/A	N/A	6 1/4"	6 1/4"	6 1/4"	6 1/4"	N/A	N/A	N/A	6 1/4"	6 1/4"	N/A	N/A	N/A	N/A	6 1/4"	6 1/4"	N/A	6 1/4"	6 1/4"	N/A	6 (TOP/BOTTOM)	>8'−8" TO 11'−2"
+43.8,−48.0 OR LESS	N/A	N/A	N/A	N/A	6 1/4"	6 1/4"	N/A	N/A	N/A	6 1/4"	6 1/4"	N/A	N/A	N/A	N/A	6 1/4"	6 1/4"	N/A	6 1/4"	6 1/4"	N/A	8, 9, 10 (TOP)	12'−4" OR LESS
	6"	4"	N/A	N/A	6"	6"	6"	6"	6"	6"	6"	5 1/2"	6"	6"	6"	6"	6"	5 1/2"	6"	6"	3 1/2"	8 (BOTTOM)	
	6"	4"	N/A	N/A	6"	6"	6"	6"	6"	6"	6"	5 1/2"	6"	6"	6"	6"	6"	5 1/2"	6"	6"	3 1/2"	9 (BOTTOM)	
	N/A	N/A	N/A	N/A	6 1/4"	6 1/4"	N/A	N/A	N/A	6 1/4"	6 1/4"	N/A	N/A	N/A	N/A	6 1/4"	6 1/4"	N/A	6 1/4"	6 1/4"	N/A	10 (BOTTOM)	

SEE SHEETS 10 & 11 FOR ANCHORS TYPE & SPACING FOR INSTALLATIONS INTO WOOD FRAME BUILDING.
MINIMUM ANCHOR SPACINGS AND MINIMUM EDGE DISTANCE ARE INDICATED ON THIS SCHEDULE. FOR E.D. LESS THAN INDICATED ON SCHEDULE REDUCE ANCHOR SPACING BY MULTIPLYING SPACING SHOWN ON SCHEDULE BY THE FOLLOWING FACTORS. FOR THIS OPERATION TO BE POSSIBLE, REDUCED SPACING OBTAINED USING FACTOR SHALL NOT BE LESS THAN MINIMUM SPACING INDICATED FOR EACH ANCHOR TYPE AT ANCHORS LEGEND.

ANCHOR TYPE		1/4"ø	1/4"ø	1/4"ø	1/4"ø	1/4"ø	1/4"ø	1/4"ø	1/4"ø
		ULTRACON+ OR ULTRACON SS4	ELCO PANELMATE FEMALE ID	ELCO PANELMATE PLUS	HILLMAN SOLID SET 1/4" CS	HILLMAN SOLID SET #14 FEM,CS	HILLMAN SOLID SET 1/4" 410,SS	HILLMAN SOLID SET #14 MALE,CS	HILLMAN SOLID SET#14 MALE 304 SS
Min. ANCHOR SPACING (in.)		3	3	3	3	3	3	3	3
**EDGE DISTANCE (E.D. Min.)	Concrete (in.)	3	3	3	3	3	3	3	3
	Grout filled (in.)	–	–	–	3	3	3	3	3
	Concrete Block (in.)	3	3 1/2	3 1/2	3	3	3	3	3
ACTUAL E.D. (EDGE DISTANCE)		FACTOR							
1 1/2"		.35	–	–	–	–	–	–	–
2 1/2"		–	–	–	–	–	–	–	–
3"		1.00	–	1.00	–	–	–	–	–
3 1/2"		–	1.00	–	–	–	–	–	–

WALTER A. TILLIT JR. LICENSE No. 44167 STATE OF FLORIDA PROFESSIONAL ENGINEER

P.E. SEAL/SIGNATURE/DATE

©2026 TILTECO, INC.

TILTECO INC.
TILLIT TESTING & ENGINEERING COMPANY
6355 N.W. 36th. St., Ste. 305, VIRGINIA GARDENS, Fl. 33166
Phone : (305) 871-1530 . Fax : (305) 871-1531
CA-0006719
WALTER A. TILLIT Jr., P.E.
FLORIDA Lic. # 44167

FLORIDA BUILDING CODE (High Velocity Hurricane Zone)

20 GAGE GALVANIZED STEEL STORM PANEL

GLOBAL PROTECTION PRODUCTS, LLC.
4800 S.W. 51 STREET
DAVIE, FL. 33314
PHONE: (954)689-7545, FAX: (954)689-8797

REV. No	DESCRIPTION	DATE	REV. No	DESCRIPTION	DATE
1	OLD 23-194	6/25/26	3	–	–
2			4	–	–

W.H.
DRAWN BY:

6/25/2026
DATE:

26-070
DRAWING No:

INSTALLATION DETAILS FOR REGULAR PANELS (1) & (1A) INTO EXISTING WOOD STRUCTURES

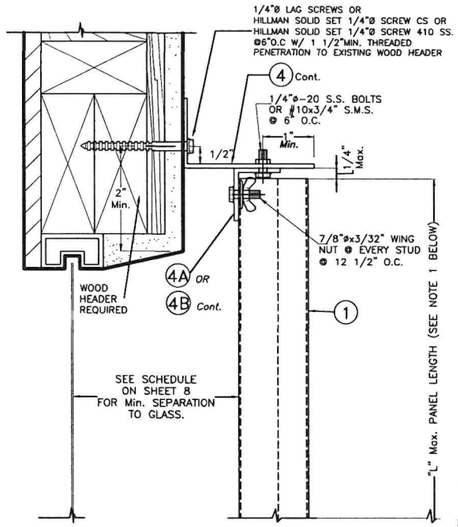

BUILD-OUT MOUNTING INSTALLATION – ALTERNATIVE 1W

SCALE: 1/4" = 1"

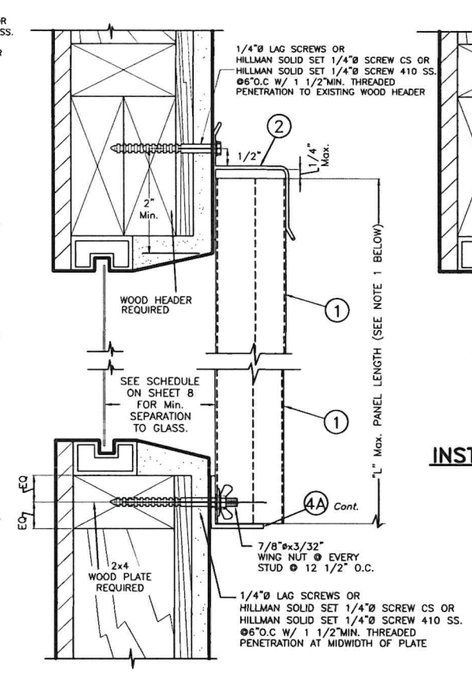

WALL MOUNTING INSTALLATION – ALTERNATIVE 2W

SCALE: 1/4" = 1"

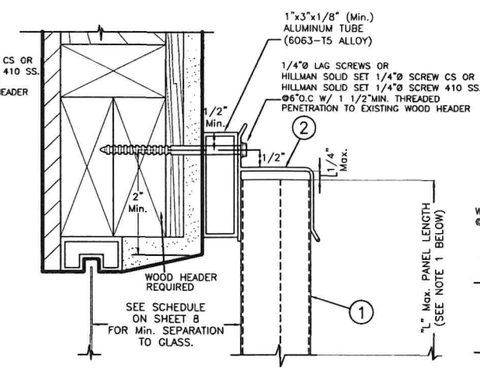

WALL MOUNTING INSTALLATION – ALTERNATIVE 3W

SCALE: 1/4" = 1"

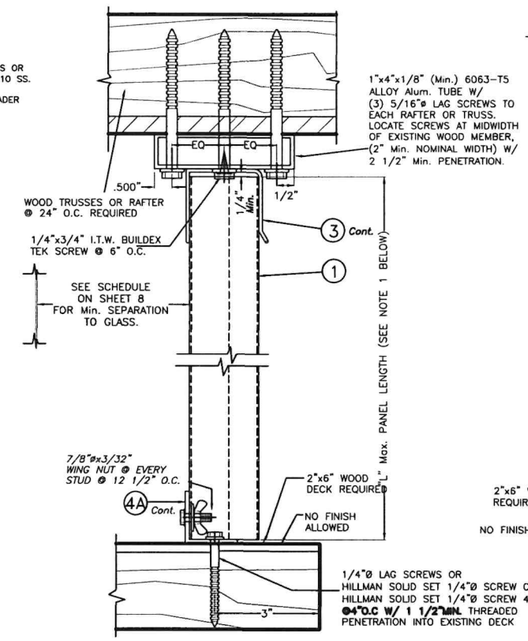

CEILING & FLOOR MOUNTING INSTALLATION – ALTERNATIVE 4W

(SECTION AT TOP IS LIMITED TO +55.5–67.0 MAX. A.S.D. DESIGN PRESSURE RATING)

SCALE: 1/4" = 1"

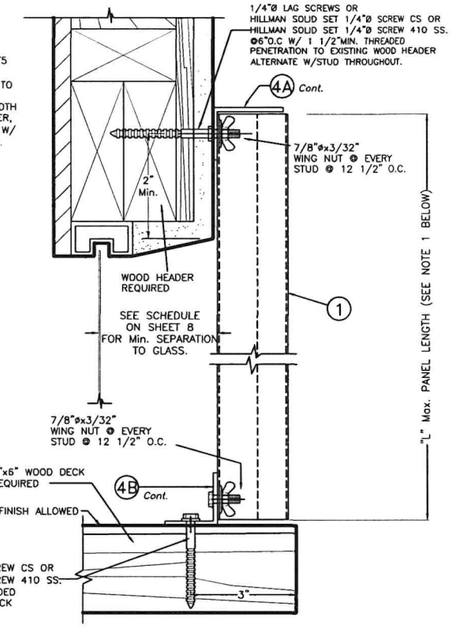

WALL & FLOOR MOUNTING INSTALLATIONS – ALTERNATIVE 5W

SCALE: 1/4" = 1"

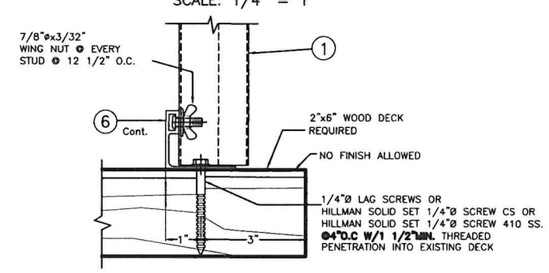

FLOOR MOUNTING INSTALLATION – SECTION 4AW

SCALE: 1/4" = 1"

NOTES:

1. INSTALLATIONS ARE ONLY VALID FOR BUILDINGS WITH A.S.D. DESIGN LOADS UP TO +55.5, –72.0 p.s.f. AND PANEL'S LENGTH UP TO 8'–8".
2. FOR NEW WOOD FRAME CONSTRUCTION: WOOD MEMBERS TO BE SOUTHERN PINE NO. 2, W/ SPECIFIC DENSITY OF 0.55 OR EQUAL.

NOTE FOR COMBINATION OF SECTIONS:

TOP & BOTTOM MOUNTINGS CAN BE COMBINED IN ANY WAY TO SUIT ANY INSTALLATION.

WALTER A. TILLIT JR. LICENSE No 44167 STATE OF FLORIDA PROFESSIONAL ENGINEER

P.E. SEAL/SIGNATURE/DATE

FLORIDA BUILDING CODE (High Velocity Hurricane Zone)

©2026 TILTECO, INC.

TILTECO INC.
TILLIT TESTING & ENGINEERING COMPANY
6355 N.W. 36th. St., Ste. 305, VIRGINIA GARDENS, Fl. 33166
Phone : (305) 871-1530 . Fax : (305) 871-1531
CA-0006719
WALTER A. TILLIT Jr., P.E.
FLORIDA Lic. # 44167

20 GAGE GALVANIZED STEEL STORM PANEL

GLOBAL PROTECTION PRODUCTS, LLC.
4800 S.W. 51 STREET
DAVIE, FL. 33314
PHONE: (954)689-7545, FAX: (954)689-8797

REV. No	DESCRIPTION	DATE	REV. No	DESCRIPTION	DATE
1	OLD 23-194	6/25/26	3	–	–
2			4	–	–

W.H.
DRAWN BY:

6/25/2026
DATE:

26-070
DRAWING No:

SHEET 10 OF 26

INSTALLATION DETAILS FOR REGULAR PANELS (1) & (1A) INTO EXISTING WOOD STRUCTURES

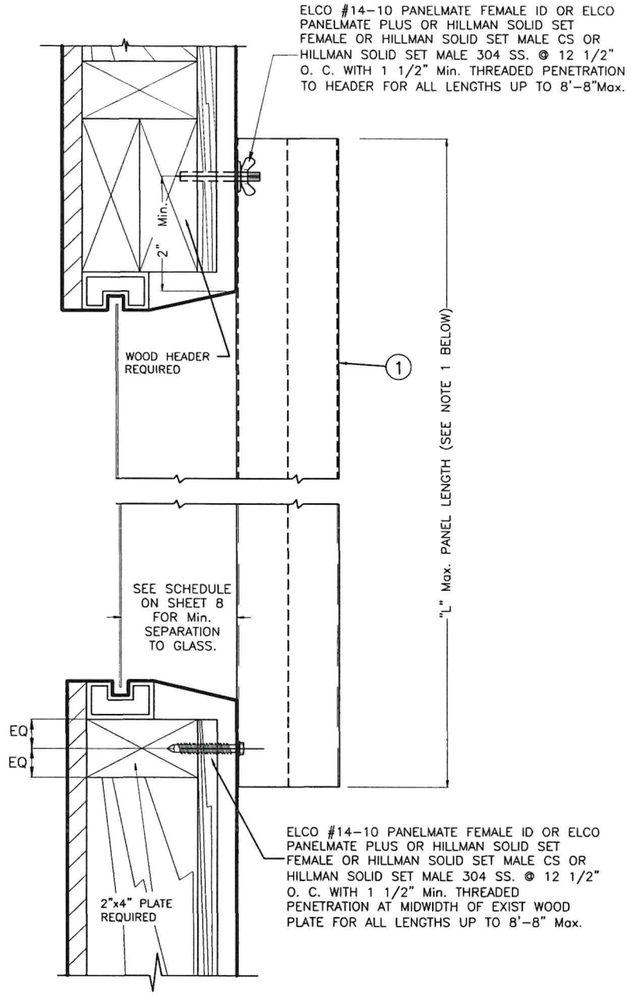

DIRECT MOUNTING INSTALLATION ALTERNATIVE 6W

SCALE 3/8=1"

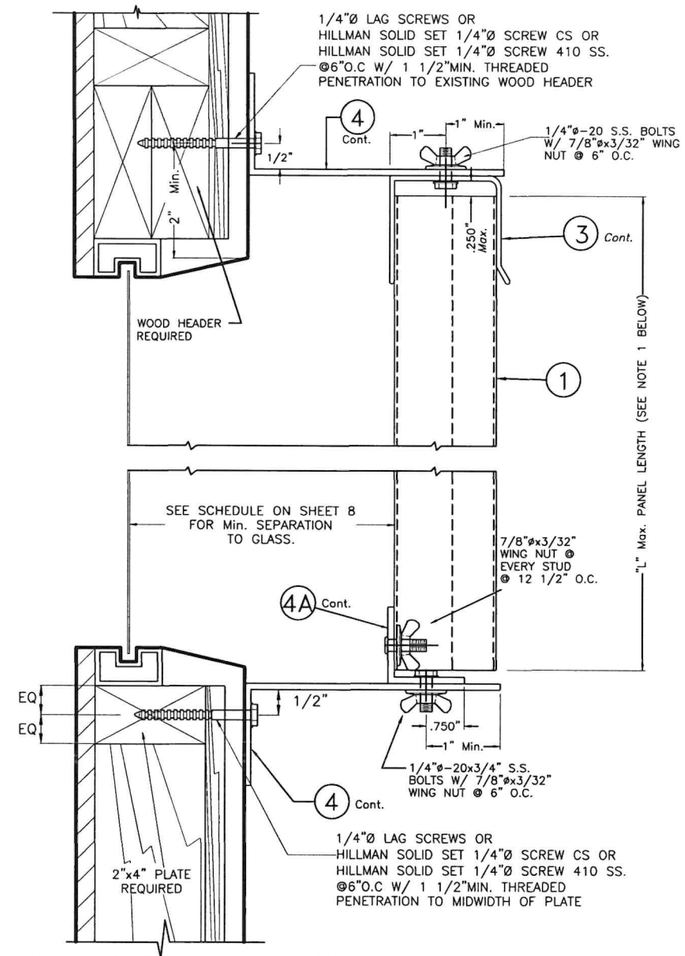

BUILD-OUT MOUNTING INSTALLATION ALTERNATIVE 7W

SCALE 3/8=1"

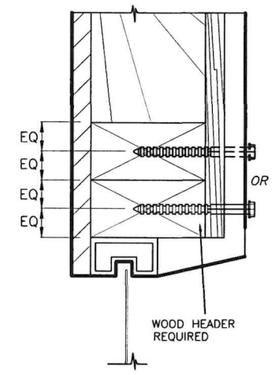

ALTERNATIVE 1W

SCALE 3/8=1"

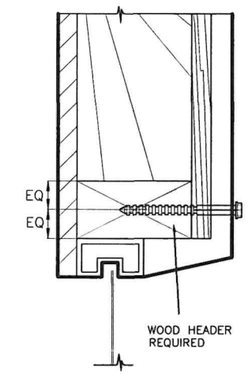

ALTERNATIVE 2W

SCALE 3/8=1"

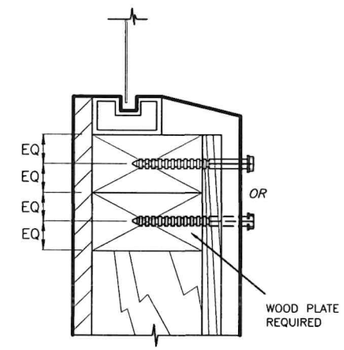

ALTERNATIVE 3W

SCALE 3/8=1"

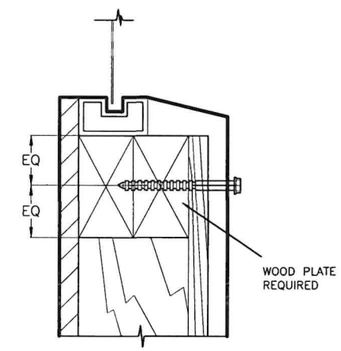

ALTERNATIVE 4W

SCALE 3/8=1"

ALTERNATIVE WOOD FRAME CONDITIONS & ANCHOR LOCATIONS

NOTE : SHUTTER TRACKS NOT SHOWN FOR CLARITY

NOTES:

1. INSTALLATIONS ARE ONLY VALID FOR BUILDINGS WITH A.S.D. DESIGN LOADS UP TO +55.5, -72.0 PSF AND PANEL'S LENGTH UP TO 8'-8".
2. FOR NEW WOOD FRAME CONSTRUCTION: WOOD MEMBERS TO BE SOUTHERN PINE NO. 2, W/ SPECIFIC DENSITY OF 0.55 OR EQUAL.

NOTE FOR COMBINATION OF SECTIONS:

TOP & BOTTOM MOUNTINGS CAN BE COMBINED IN ANY WAY TO SUIT ANY INSTALLATION.

WALTER A. TILLIT JR. LICENSE No. 44167 STATE OF FLORIDA PROFESSIONAL ENGINEER

7/7/2026

P.E. SEAL/SIGNATURE/DATE

©2026 TILTECO, INC.

TILTECO INC.
TILLIT TESTING & ENGINEERING COMPANY
6355 N.W. 36th. St., Ste. 305, VIRGINIA GARDENS, Fl. 33166
Phone : (305) 871-1530 . Fax : (305) 871-1531
CA-0006719
WALTER A. TILLIT Jr., P.E.
FLORIDA Lic. # 44167

FLORIDA BUILDING CODE (High Velocity Hurricane Zone)

20 GAGE GALVANIZED STEEL STORM PANEL

GLOBAL PROTECTION PRODUCTS, LLC.
4800 S.W. 51 STREET
DAVIE, FL. 33314
PHONE: (954)689-7545, FAX: (954)689-8797

REV. No	DESCRIPTION	DATE	REV. No	DESCRIPTION	DATE
1	OLD 23-194	6/25/26	3	–	–
2			4	–	–

W.H.
DRAWN BY:

6/25/2026
DATE:

26-070
DRAWING No:

SHEET 11 OF 26

INSTALLATION DETAILS FOR REGULAR PANELS (1) & (1A) INTO EXISTING WOOD STRUCTURES

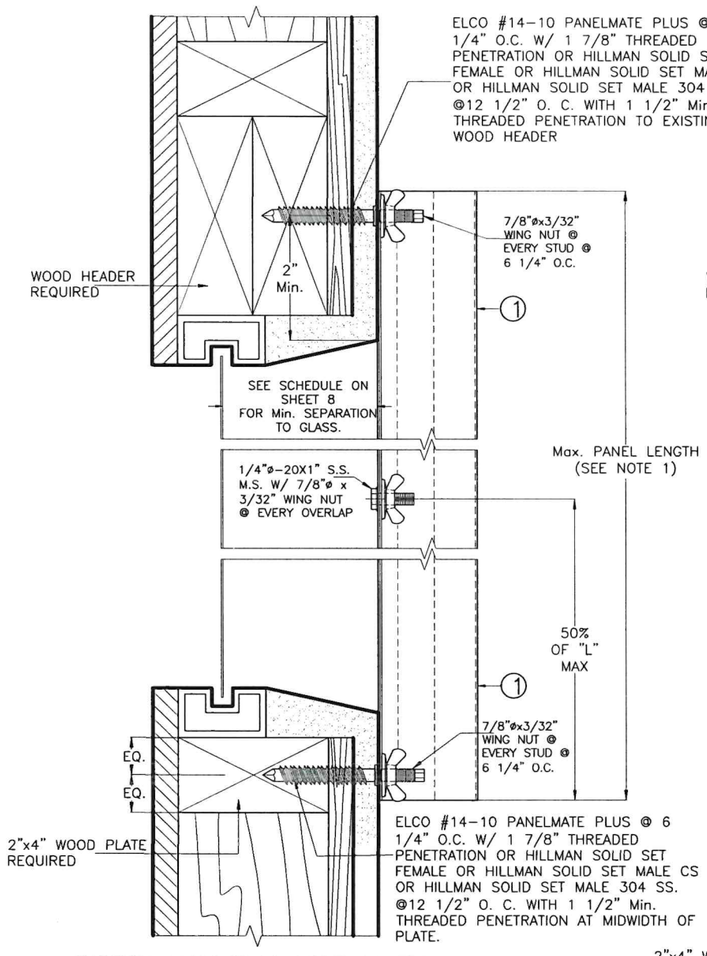

DIRECT MOUNTING INSTALLATION ALTERNATIVE 8W

SCALE 3/8=1"

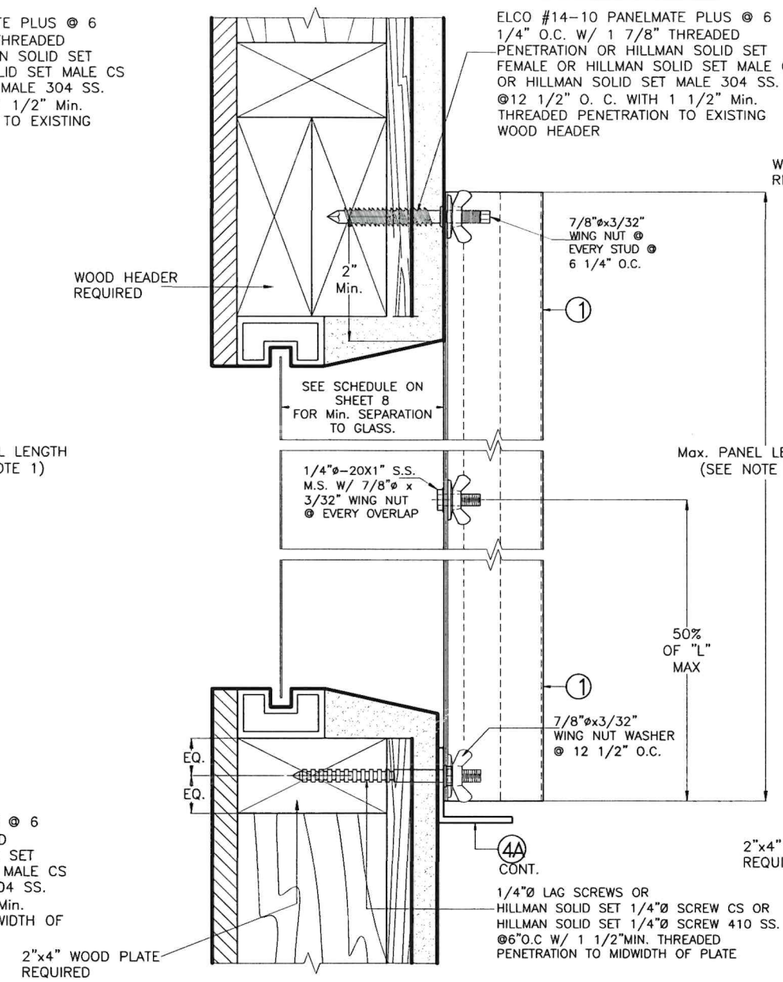

DIRECT MOUNT / WALL MOUNTING INSTALLATION ALTERNATIVE 9W

SCALE 3/8=1"

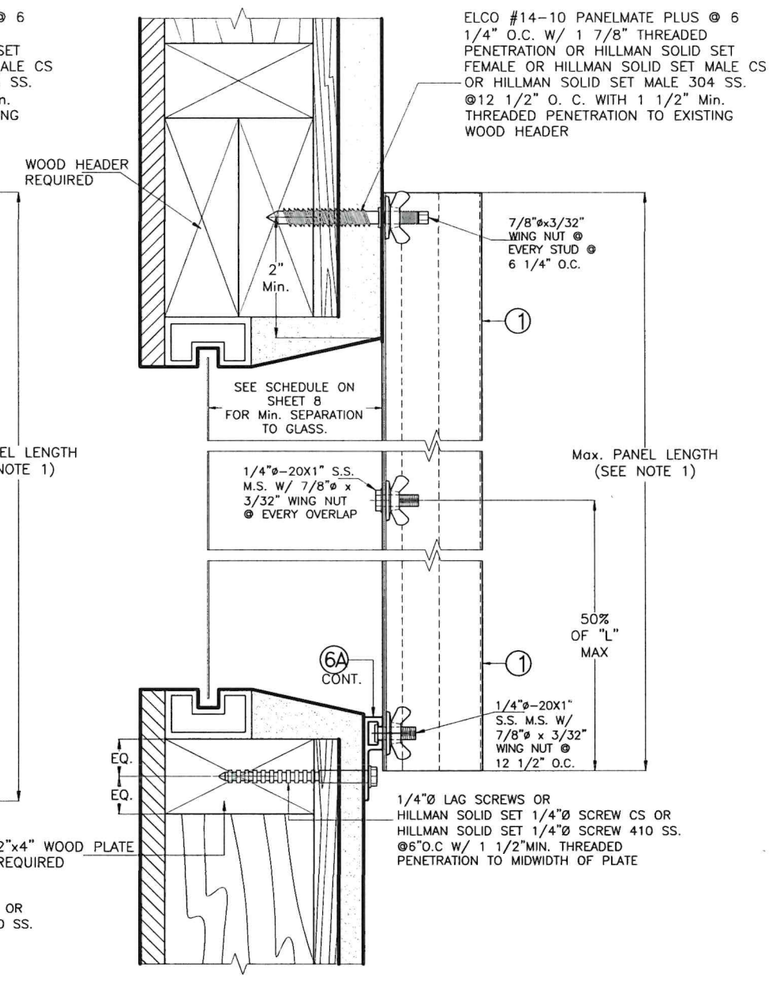

DIRECT MOUNT / WALL MOUNTING INSTALLATION ALTERNATIVE 10W

SCALE 3/8=1"

NOTES:

1. INSTALLATIONS FOR ALTERNATIVES 8W, 9W & 10W ONLY VALID FOR BUILDINGS WITH A.S.D. DESIGN LOADS UP TO +43.8, -48.0 p.s.f. AND PANEL'S LENGTH UP TO 12'-4"
2. FOR NEW WOOD FRAME CONSTRUCTION: WOOD MEMBERS TO BE SOUTHERN PINE NO. 2, W/ SPECIFIC DENSITY OF 0.55 OR EQUAL.

NOTE FOR COMBINATION OF SECTIONS:

TOP & BOTTOM MOUNTINGS CAN BE COMBINED IN ANY WAY TO SUIT ANY INSTALLATION.

WALTER A. TILLIT JR. LICENSE No. 44167 STATE OF FLORIDA PROFESSIONAL ENGINEER

P.E. SEAL/SIGNATURE/DATE

©2026 TILTECO, INC.

TILTECO INC.
TILLIT TESTING & ENGINEERING COMPANY
6355 N.W. 36th. St., Ste. 305, VIRGINIA GARDENS, Fl. 33166
Phone : (305) 871-1530 . Fax : (305) 871-1531
CA-0006719
WALTER A. TILLIT Jr., P.E.
FLORIDA Lic. # 44167

FLORIDA BUILDING CODE (High Velocity Hurricane Zone)

20 GAGE GALVANIZED STEEL STORM PANEL

GLOBAL PROTECTION PRODUCTS, LLC.
4800 S.W. 51 STREET
DAVIE, FL. 33314
PHONE: (954)689-7545, FAX: (954)689-8797

REV. No	DESCRIPTION	DATE	REV. No	DESCRIPTION	DATE
1	OLD 23-194	6/25/26	3	-	-
2			4	-	-

W.H.
DRAWN BY:

6/25/2026
DATE:

26-070
DRAWING No:

SHEET 12 OF 26

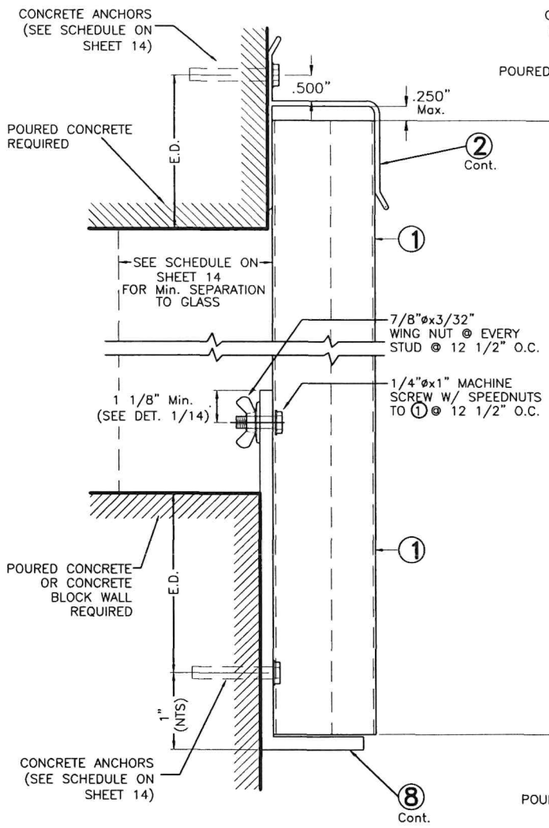

WALL MOUNTING INSTALLATION – SECTION 1

SCALE: 3/8" = 1"

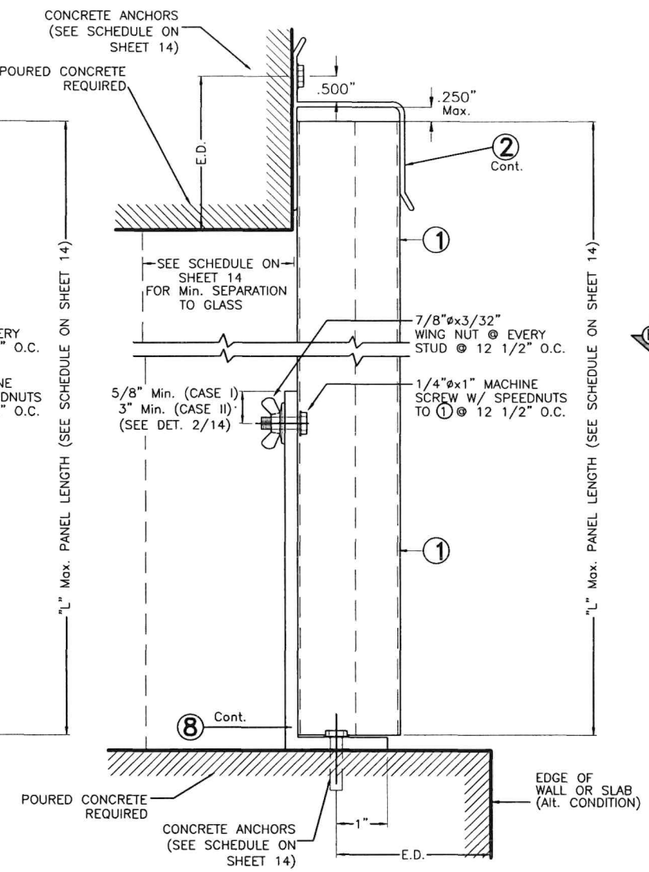

WALL AND FLOOR MOUNTING INSTALLATION – SECTION 2

SCALE: 3/8" = 1"

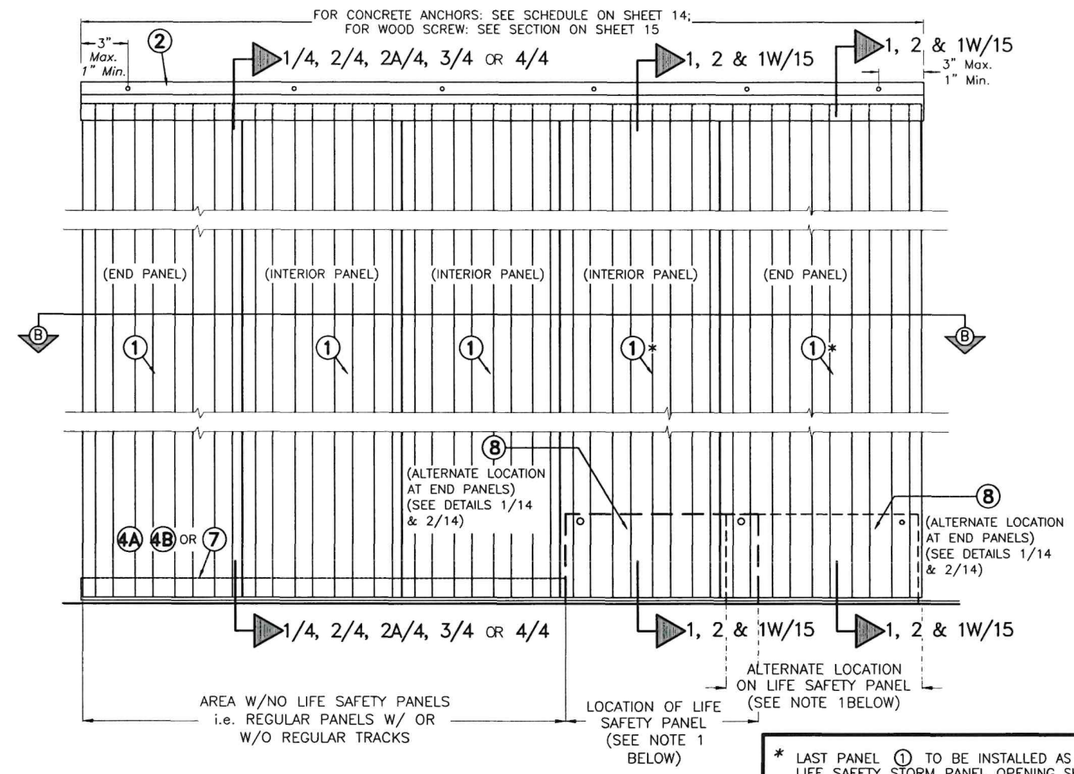

OPTION #1 FOR LIFE SAFETY STORM PANEL 1 & 1A ELEVATION

SCALE 3/32"=1"

* LAST PANEL 1 TO BE INSTALLED AS LIFE SAFETY STORM PANEL OPENING SHALL ALWAYS BE PROVIDED W/ REAR HANDLE TO FACILITATE INSTALLATION IF INTENDED TO BE INSTALLED OR REMOVED FROM INSIDE OF STRUCTURE.

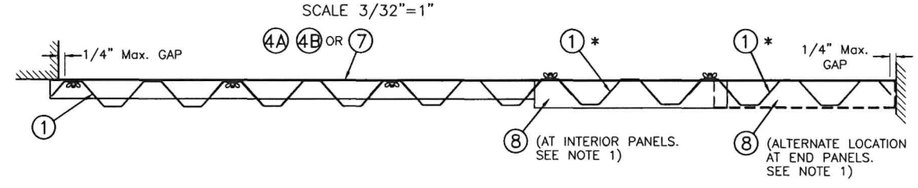

SECTION B–B

SCALE 3/32"=1"

NOTES ON LIFE SAFETY STORM PANEL SYSTEM INSTALLATION :

1. LIFE SAFETY STORM PANEL CAN BE LOCATED AS AN END PANEL (FIRST OR LAST PANEL) OR AS AN INTERIOR PANEL. (ANY PANEL LOCATION IN BETWEEN END PANELS). LIFE SAFETY PANELS MAY OR MAY NOT BE INSTALLED ADJACENT TO REGULAR PANELS (W/ OR W/O REGULAR TRACKS.)
2. LIFE SAFETY STORM PANEL CONSISTS OF 0.039" GALVANIZED STEEL STORM PANEL AS PER COMPONENT 1 , SHEET 2 OF DRAWING. THIS PANEL ALLOWS ITSELF TO BE REMOVED OR INSTALLED FROM THE INSIDE OF STRUCTURE.
3. LIFE SAFETY PANEL REQUIRES TOP TRACK TO BE COMPONENT 2 & BOTTOM TRACK TO BE COMPONENT 8 AS PER SHEET 2 OF THIS DRAWING. COMPONENT 8 MAY BE INSTALLED WALL OR FLOOR MOUNTED FOLLOWING SECTIONS 1 & 2 ON THIS SHEET, AS WELL AS DETAILS 1 & 2 ON SHEET 14.
4. Min. LENGTH FOR COMPONENT 8 IS 15". Max. ANCHOR SPACING FOR COMPONENT 8 ANCHORAGE AT BOTTOM IS GIVEN ON SCHEDULES 1 & 2, SHEET 14. COMPONENT 8 MAY BE PERMANENT OR REMOVABLE.
5. SEE DETAILS FOR INSTALLATION INTO WOOD FRAME BUILDINGS ON SHEET 15.
6. SEE SHEET 4 FOR DETAIL APPLICABLE TO THE NECESSITY FOR THE INSTALLATION OF SPACERS AT TRACKS INSTALLED ADJACENT AND BEYOND TO STUCCO/WOOD BANDS.
7. SEE SHEET 1A FOR ANCHOR MIN. E.D & MIN EMBEDMENT.

WALTER A. TILLIT JR. LICENSE No. 44167 STATE OF FLORIDA PROFESSIONAL ENGINEER

P.E. SEAL/SIGNATURE/DATE

©2026 TILTECO, INC.

TILTECO INC.
TILLIT TESTING & ENGINEERING COMPANY
6355 N.W. 36th. St., Ste. 305, VIRGINIA GARDENS, Fl. 33166
Phone : (305) 871–1530 . Fax . (305) 871–1531
CA–0006719
WALTER A. TILLIT Jr., P.E.
FLORIDA Lic. # 44167

FLORIDA BUILDING CODE (High Velocity Hurricane Zone)

20 GAGE GALVANIZED STEEL STORM PANEL

GLOBAL PROTECTION PRODUCTS, LLC.
4800 S.W. 51 STREET
DAVIE, FL. 33314
PHONE: (954)689–7545, FAX: (954)689–8797

REV. No	DESCRIPTION	DATE	REV. No	DESCRIPTION	DATE
1	OLD 23–194	6/25/26	3	–	–
2			4	–	–

W.H.
DRAWN BY:
6/25/2026
DATE:
26–070
DRAWING No:
SHEET 13 OF 26

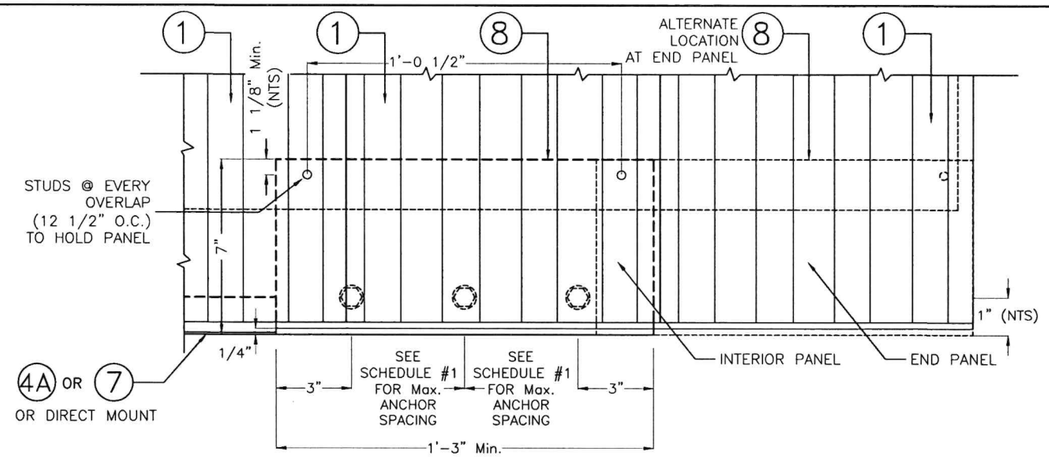

DETAIL 1 : WALL MOUNTING INSTALLATION (APPLICABLE TO SCHEDULE 1)

SCALE: 3/16" = 1"

MAXIMUM A.S.D. DESIGN PRESSURE RATING (p.s.f.) AND CORRESPONDING MAXIMUM ANCHOR SPACING SCHEDULE AT 8 FOR INSTALLATIONS INTO CONCRETE & CONCRETE BLOCK STRUCTURES

SCHEDULE # 1 : 8 W/ WALL MOUNT CONDITIONS TOP & BOTTOM W/ E.D. = 3 1/2" *

MAXIMUM A.S.D. DESIGN PRESSURE RATING (p.s.f.)	ULTRACON+ OR ULTRACON SS4		ELCO PANELMATE FEMALE ID		ELCO PANELMATE PLUS		HILLMAN SOLID SET 1/4" SCREW CS			HILLMAN SOLID SET #14 FEMALE CS.			HILLMAN SOLID SET 1/4" SCREW 410 SS.			HILLMAN SOLID SET #14 MALE CS.			HILLMAN SOLID SET #14 MALE 304 SS.			APPLICABLE TO SECTIONS # & ANY COMBINATION OF THEM	MAXIMUM PANEL LENGTH "L" (ft.)
	TO CONCRETE	TO CONCRETE BLOCK	TO CONCRETE	TO CONCRETE BLOCK	TO CONCRETE	TO CONCRETE BLOCK	TO CONCRETE	GROUT FILLET	TO CONCRETE BLOCK	TO CONCRETE	GROUT FILLET	TO CONCRETE BLOCK	TO CONCRETE	GROUT FILLET	TO CONCRETE BLOCK	TO CONCRETE	GROUT FILLET	TO CONCRETE BLOCK	TO CONCRETE	GROUT FILLET	TO CONCRETE BLOCK		
+55.0, −72.0	6"	N/A	6"	N/A	6"	N/A	6"	N/A	N/A	6"	N/A	N/A	6"	N/A	N/A	6"	N/A	N/A	6"	N/A	N/A	1 & 2 (TOP)	5'-0" OR LESS
	9"	7"	9"	9"	9"	9"	9"	9"	9"	9"	9"	9"	9"	9"	9"	9"	9"	9"	9"	9"	6"	1 (BOTTOM)	
+55.0 −72.0	6"	N/A	6"	N/A	6"	N/A	6"	N/A	N/A	6"	N/A	N/A	6"	N/A	N/A	6"	N/A	N/A	6"	N/A	N/A	1 & 2 (TOP)	>5'-0" TO 7'-6"
	9"	5"	9"	9"	9"	9"	9"	9"	8"	9"	9"	6 1/4"	9"	9"	7"	9"	9"	6 1/4"	9"	9"	4"	1 (BOTTOM)	
+55.0 −72.0	6"	N/A	6"	N/A	6"	N/A	6"	N/A	N/A	6"	N/A	N/A	6"	N/A	N/A	6"	N/A	N/A	6"	N/A	N/A	1 & 2 (TOP)	>7'-6" TO 8'-8"
	9"	4"	6"	6"	6"	6"	9"	9"	6 1/2"	9"	9"	5 1/2"	9"	9"	6"	9"	9"	6"	9"	9"	3 1/2"	1 (BOTTOM)	

(APPLICABLE ONLY TO SECTIONS 1 & 2 INDICATED FOR LIFE SAFETY STORM PANEL SYSTEM ON SHEET 13).

MAXIMUM A.S.D. DESIGN PRESSURE RATING (p.s.f.)	Max. PANEL LENGTH "L" (ft.) (SEE SECTIONS)	MINIMUM SEPARATION TO GLASS	PANEL CONDITION
+55.0, −72.0	8'-8"	2 3/4"	UNBOLTED

SEE SHEET 15 FOR ANCHORS TYPE & SPACING FOR INSTALLATIONS INTO WOOD FRAME BUILDING.
MINIMUM ANCHOR SPACINGS AND MINIMUM EDGE DISTANCE ARE INDICATED ON THIS SCHEDULE. FOR E.D. LESS THAN INDICATED ON SCHEDULE REDUCE ANCHOR SPACING BY MULTIPLYING SPACING SHOWN ON SCHEDULE BY THE FOLLOWING FACTORS. FOR THIS OPERATION TO BE POSSIBLE, REDUCED SPACING OBTAINED USING FACTOR SHALL NOT BE LESS THAN MINIMUM SPACING INDICATED FOR EACH ANCHOR TYPE AT ANCHORS LEGEND.

ANCHOR TYPE		1/4"ø	1/4"ø	1/4"ø	HILLMAN SOLID-SET 1/4" CS	HILLMAN SOLID-SET #14 FEM. CS	HILLMAN SOLID-SET 1/4" 410 SS	HILLMAN SOLID-SET #14 MALE CS	HILLMAN SOLID-SET#14 MALE 304 SS
		ULTRACON+ OR ULTRACON SS4	ELCO PANELMATE FEMALE ID	ELCO PANELMATE PLUS					
Min. ANCHOR SPACING (in.)		3	3	3	3	3	3	3	3
*EDGE DISTANCE (E.D. Min.)	Concrete (in.)	3	3	3	3	3	3	3	3
	Grout filled (in.)	–	–	–	3	3	3	3	3
	Concrete Block (in.)	3	3 1/2	3 1/2	3	3	3	3	3
ACTUAL E.D. (EDGE DISTANCE)					FACTOR				
1 1/2"		.35	–	–	–	–	–	–	–
2 1/2"		–	–	–	–	–	–	–	–
3"		1.00	–	1.00	–	–	–	–	–
3 1/2"		–	1.00	–	–	–	–	–	–

WALTER A. TILLIT JR. LICENSE No. 44167 STATE OF FLORIDA PROFESSIONAL ENGINEER

P.E. SEAL/SIGNATURE/DATE

©2026 TILTECO, INC.

TILTECO INC.
TILLIT TESTING & ENGINEERING COMPANY
6355 N.W. 36th. St., Ste. 305, VIRGINIA GARDENS, Fl. 33166
Phone : (305) 871-1530 . Fax : (305) 871-1531
CA-0006719
WALTER A. TILLIT Jr., P.E.
FLORIDA Lic. # 44167

FLORIDA BUILDING CODE (High Velocity Hurricane Zone)

20 GAGE GALVANIZED STEEL STORM PANEL

GLOBAL PROTECTION PRODUCTS, LLC.
4800 S.W. 51 STREET
DAVIE, FL. 33314
PHONE: (954)689-7545, FAX: (954)689-8797

REV. No	DESCRIPTION	DATE	REV. No	DESCRIPTION	DATE
1	OLD 23-194	6/25/26	3	–	–
2			4	–	–

W.H.
DRAWN BY:

6/25/2026
DATE:

26-070
DRAWING No:

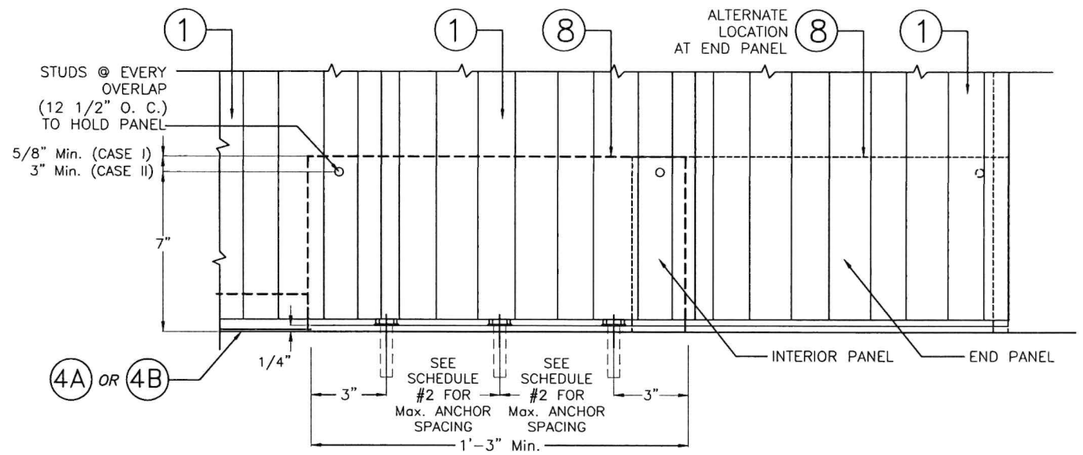

DETAIL 2 : FLOOR MOUNTING INSTALLATION (APPLICABLE TO SCHEDULE 2)

SCALE: 3/16" = 1"

MAXIMUM A.S.D. DESIGN PRESSURE RATING (p.s.f.) AND CORRESPONDING MAXIMUM PANEL LENGTH "L" SCHEDULE

SCHEDULE # 2 : (8) W/ FLOOR MOUNT CONDITIONS AT BOTTOM W/ E.D. = 3 1/2" *

MAXIMUM A.S.D. DESIGN PRESSURE RATING (p.s.f.)	CASE I (STUD @ 5/8" Min. FROM TOP OF ANGLE)						CASE II (STUD @ 3" Min. FROM TOP OF ANGLE)						APPLICABLE TO SECTIONS # & ANY COMBINATION OF THEM	MAXIMUM PANEL LENGTH "L" (ft.)
	ULTRACON+ OR ULTRACON SS4 TO CONCRETE	HILLMAN SOLID SET 1/4" CS	HILLMAN SOLID SET #14 FEM. CS.	HILLMAN SOLID SET 1/4" 410 SS.	HILLMAN SOLID SET #14 MALE CS.	HILLMAN SOLID SET #14 MALE 304 SS.	ULTRACON+ TO CONCRETE	HILLMAN SOLID SET 1/4" CS	HILLMAN SOLID SET #14 FEM. CS.	HILLMAN SOLID SET 1/4" 410 SS.	HILLMAN SOLID SET #14 MALE CS.	HILLMAN SOLID SET #14 MALE 304 SS.		
+49.2 −61.5	3"	3 1/4"	3 1/2"	3 1/4"	3 1/2"	2 1/2"	4 1/2"	4 1/2"	4 1/2"	4 1/2"	4 1/2"	4"	2 (BOTTOM)	7'−6" OR LESS
+52.8 −66.0	3"	3"	3 1/4"	3"	3 1/4"	2 1/2"	4"	4"	4"	4"	4"	3 1/2"	2 (BOTTOM)	7'−6" OR LESS
+55.0 −72.0	2 1/2"	2 1/2"	3"	2 1/2"	3"	2 1/4"	4"	4"	4"	4"	4"	3 1/2"	2 (BOTTOM)	7'−6" OR LESS
+55.0 −72.0	2 1/2"	2 1/2"	2 1/2"	2 1/2"	2 1/2"	2 1/4"	N/A	2 1/2"	2 1/2"	2 1/2"	2 1/2"	2 1/2"	2 (BOTTOM)	>7'−6" TO 8'−0"
+55.0 −72.0	N/A	2 1/2"	2 1/2"	2 1/2"	2 1/2"	2"	3"	3"	3"	3"	3"	3"	2 (BOTTOM)	>7'−6" TO 8'−8"

(APPLICABLE ONLY TO SECTIONS 1 & 2 INDICATED FOR LIFE SAFETY STORM PANEL SYSTEM ON SHEET 13).

MAXIMUM A.S.D. DESIGN PRESSURE RATING (p.s.f.)	Max. PANEL LENGTH "L" (ft.) (SEE SECTIONS)	MINIMUM SEPARATION TO GLASS	PANEL CONDITION
+55.0, −72.0	8'−8"	2 3/4"	UNBOLTED

SEE SHEET 15 FOR ANCHORS TYPE & SPACING FOR INSTALLATIONS INTO WOOD FRAME BUILDING.
MINIMUM ANCHOR SPACINGS AND MINIMUM EDGE DISTANCE ARE INDICATED ON THIS SCHEDULE. FOR E.D. LESS THAN INDICATED ON SCHEDULE REDUCE ANCHOR SPACING BY MULTIPLYING SPACING SHOWN ON SCHEDULE BY THE FOLLOWING FACTORS. FOR THIS OPERATION TO BE POSSIBLE, REDUCED SPACING OBTAINED USING FACTOR SHALL NOT BE LESS THAN MINIMUM SPACING INDICATED FOR EACH ANCHOR TYPE AT ANCHORS LEGEND.

ANCHOR TYPE		1/4"ø ULTRACON+ OR ULTRACON SS4	1/4"ø ELCO PANELMATE FEMALE ID	1/4"ø ELCO PANELMATE PLUS	HILLMAN SOLID-SET 1/4" CS	HILLMAN SOLID-SET #14 FEM. CS	HILLMAN SOLID-SET 1/4" 410 SS	HILLMAN SOLID-SET #14 MALE CS	HILLMAN SOLID-SET#14 MALE 304 SS
Min. ANCHOR SPACING (in.)		3	3	3	3	3	3	3	3
*EDGE DISTANCE (E.D. Min.)	Concrete (in.)	3	3	3	3	3	3	3	3
	Grout filled (in.)	–	–	–	3	3	3	3	3
	Concrete Block (in.)	3	3 1/2	3 1/2	3	3	3	3	3
ACTUAL E.D. (EDGE DISTANCE)					FACTOR				
1 1/2"		.35	–	–	–	–	–	–	
2 1/2"		–	–	–	–	–	–	–	
3"		1.00	–	1.00	–	–	–	–	
3 1/2"		–	1.00	–	–	–	–	–	

SEE SHEET 1A FOR MIN. EMBEDMENT OF ANCHORS.

WALTER A. TILLIT JR. LICENSE No. 44167 STATE OF FLORIDA PROFESSIONAL ENGINEER

7/2/2026

P.E. SEAL/SIGNATURE/DATE

©2026 TILTECO, INC.

TILTECO INC.
TILLIT TESTING & ENGINEERING COMPANY
6355 N.W. 36th. St., Ste. 305, VIRGINIA GARDENS, Fl. 33166
Phone : (305) 871-1530 . Fax : (305) 871-1531
CA-0006719
WALTER A. TILLIT Jr., P.E.
FLORIDA Lic. # 44167

FLORIDA BUILDING CODE (High Velocity Hurricane Zone)

20 GAGE GALVANIZED STEEL STORM PANEL

GLOBAL PROTECTION PRODUCTS, LLC.
4800 S.W. 51 STREET
DAVIE, FL. 33314
PHONE: (954)689-7545, FAX: (954)689-8797

REV. No	DESCRIPTION	DATE	REV. No	DESCRIPTION	DATE
1	OLD 23-194	6/25/26	3	–	–
2			4	–	–

W.H.
DRAWN BY:

6/25/2026
DATE:

26-070
DRAWING No:

SHEET 14A OF 26

INSTALLATION DETAILS FOR OPTION # 1 FOR LIFE SAFETY STORM PANEL SYSTEM INTO EXISTING WOOD STRUCTURES

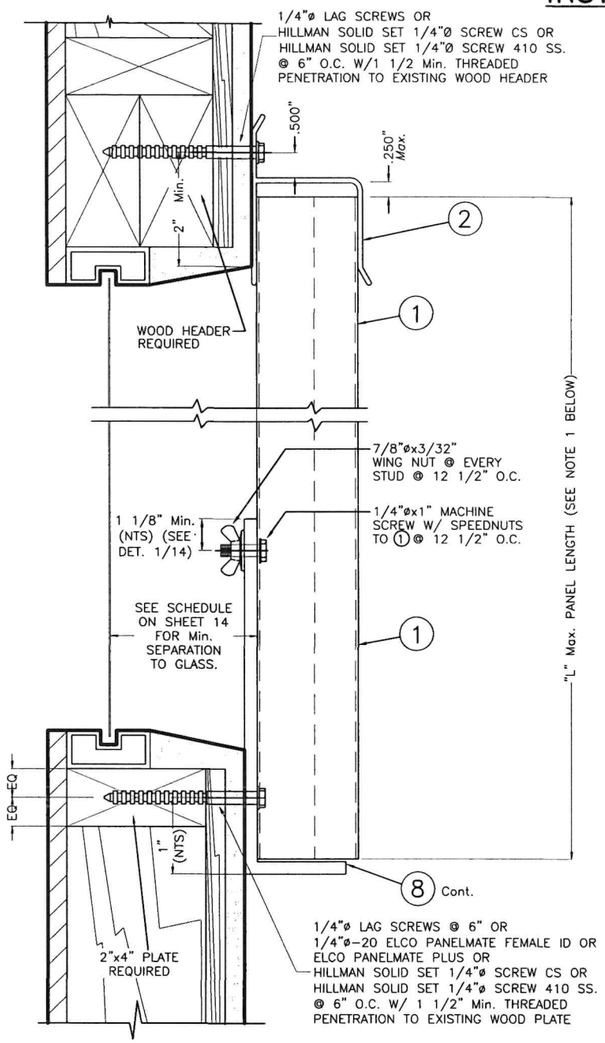

WALL MOUNTING INSTALLATION ALTERNATIVE 1W

SCALE: 3/8" = 1"

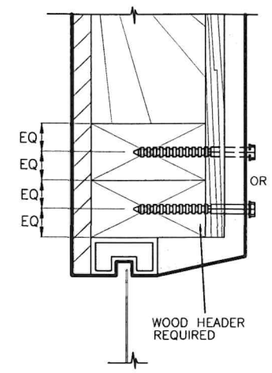

ALTERNATIVE 1

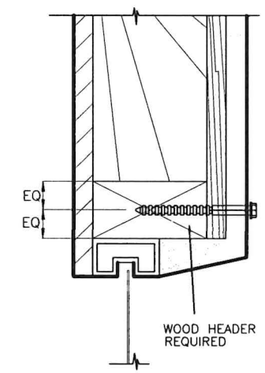

ALTERNATIVE 2

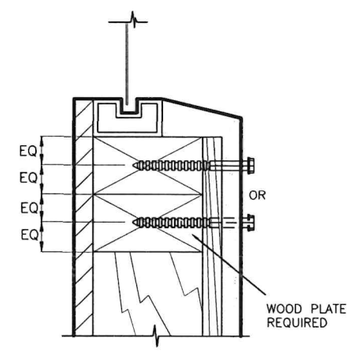

ALTERNATIVE 3

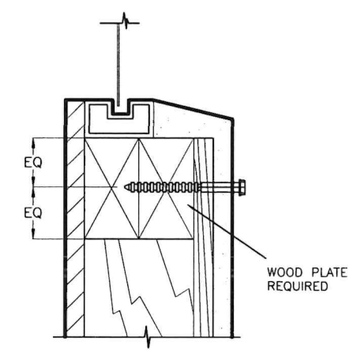

ALTERNATIVE 4

ALTERNATIVE WOOD FRAME CONDITIONS & ANCHOR LOCATIONS

SCALE: 3/8" = 1"

NOTE : SHUTTER TRACKS NOT SHOWN FOR CLARITY

NOTES:

1. INSTALLATIONS ARE ONLY VALID FOR BUILDINGS WITH A.S.D. DESIGN LOADS UP TO +55.5, −72.0 psf AND PANEL'S LENGTH UP TO 8'−8".
2. FOR NEW WOOD FRAME CONSTRUCTION: WOOD MEMBERS TO BE SOUTHERN PINE No. 2, W/ SPECIFIC DENSITY OF 0.55 OR EQUAL.

WALTER A. TILLIT JR. LICENSE No. 44167 STATE OF FLORIDA PROFESSIONAL ENGINEER

P.E. SEAL/SIGNATURE/DATE

FLORIDA BUILDING CODE (High Velocity Hurricane Zone)

©2026 TILTECO, INC.

TILTECO INC.
TILLIT TESTING & ENGINEERING COMPANY
6355 N.W. 36th. St., Ste. 305, VIRGINIA GARDENS, Fl. 33166
Phone : (305) 871-1530 . Fax : (305) 871-1531
CA-0006719
WALTER A. TILLIT Jr., P.E.
FLORIDA Lic. # 44167

20 GAGE GALVANIZED STEEL STORM PANEL

GLOBAL PROTECTION PRODUCTS, LLC.
4800 S.W. 51 STREET
DAVIE, FL. 33314
PHONE: (954)689-7545, FAX: (954)689-8797

REV. No	DESCRIPTION	DATE	REV. No	DESCRIPTION	DATE
1	OLD 23-194	6/25/26	3	–	–
2			4	–	–

W.H.
DRAWN BY:

6/25/2026
DATE:

26-070
DRAWING No:

SHEET 15 OF 26

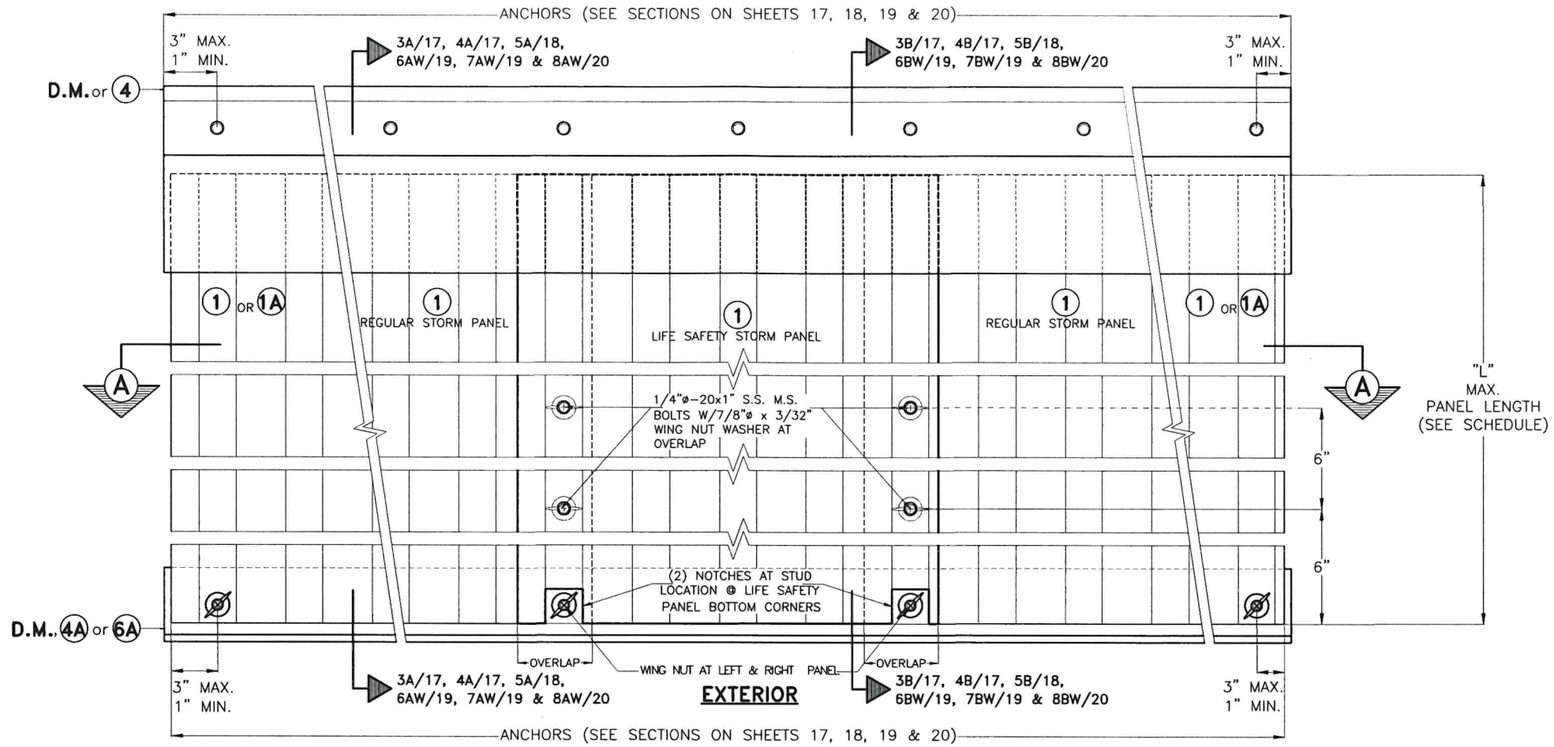

OPTION #2 FOR LIFE SAFETY STORM PANEL (1) ELEVATION

SCALE 3/16"=1"

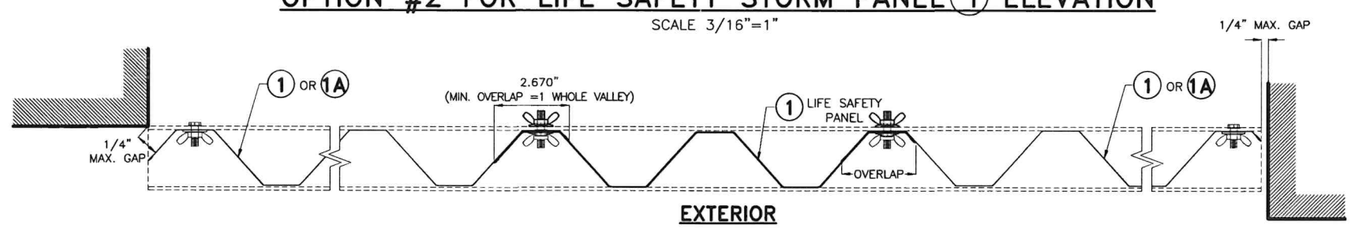

SECTION A–A

SCALE 3/16"=1"

MAXIMUM A.S.D. DESIGN PRESSURE RATING (p.s.f.) AND CORRESPONDING MAXIMUM PANEL LENGTH "L" SCHEDULE

MAXIMUM A.S.D. DESIGN PRESSURE RATING (p.s.f.)	Max. PANEL LENGTH L (ft.) (SEE SECTIONS)	MINIMUM SEPARATION TO GLASS	PANEL CONDITION
+55.0, −72.0	8'−8"	2 3/4"	UNBOLTED

WALTER A. TILLIT JR. LICENSE No. 44167 STATE OF FLORIDA PROFESSIONAL ENGINEER

P.E. SEAL/SIGNATURE/DATE

©2026 TILTECO, INC.

TILTECO INC.
TILLIT TESTING & ENGINEERING COMPANY
6355 N.W. 36th. St., Ste. 305, VIRGINIA GARDENS, Fl. 33166
Phone : (305) 871-1530 . Fax : (305) 871-1531
CA-0006719
WALTER A. TILLIT Jr., P.E.
FLORIDA Lic. # 44167

FLORIDA BUILDING CODE (High Velocity Hurricane Zone)

20 GAGE GALVANIZED STEEL STORM PANEL

GLOBAL PROTECTION PRODUCTS, LLC.
4800 S.W. 51 STREET
DAVIE, FL. 33314
PHONE: (954)689-7545, FAX: (954)689-8797

REV. No	DESCRIPTION	DATE	REV. No	DESCRIPTION	DATE
1	OLD 23-194	6/25/26	3	–	–
2			4	–	–

W.H.
DRAWN BY:

6/25/2026
DATE:

26-070
DRAWING No:

SHEET 16 OF 26

INSTALLATION DETAILS FOR OPTION #2 FOR LIFE SAFETY STORM PANEL SYSTEM INTO EXISTING POURED CONCRETE OR CONCRETE BLOCK STRUCTURES

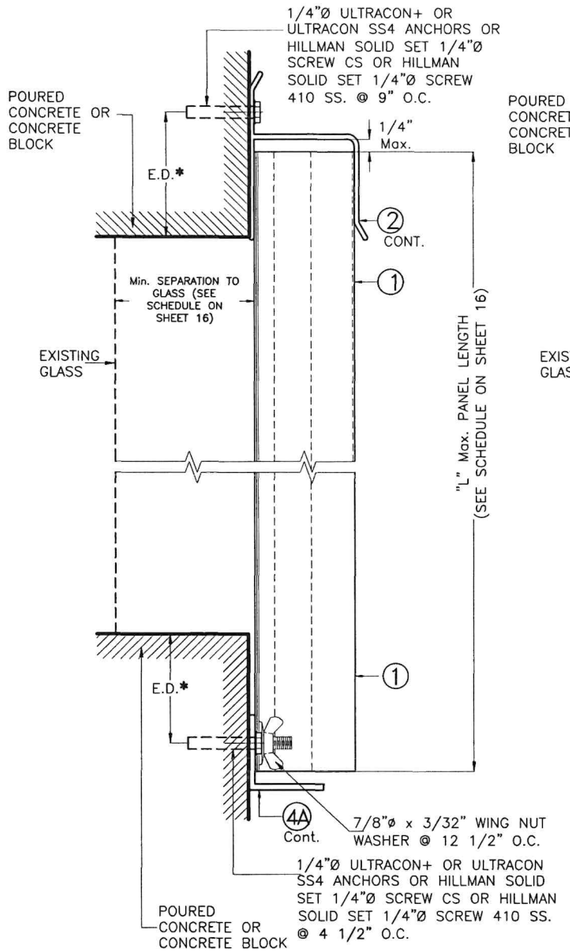

WALL MOUNTING INSTALLATION SECTION 3A @ REGULAR PANEL

SCALE 3/8"=1"

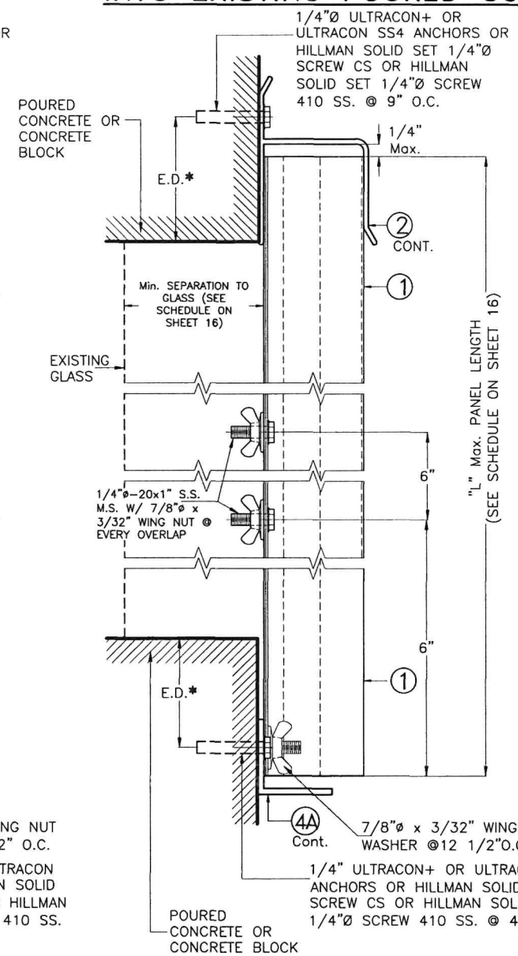

WALL MOUNTING INSTALLATION SECTION 3B @ LIFE SAFETY PANEL

SCALE 3/8"=1"

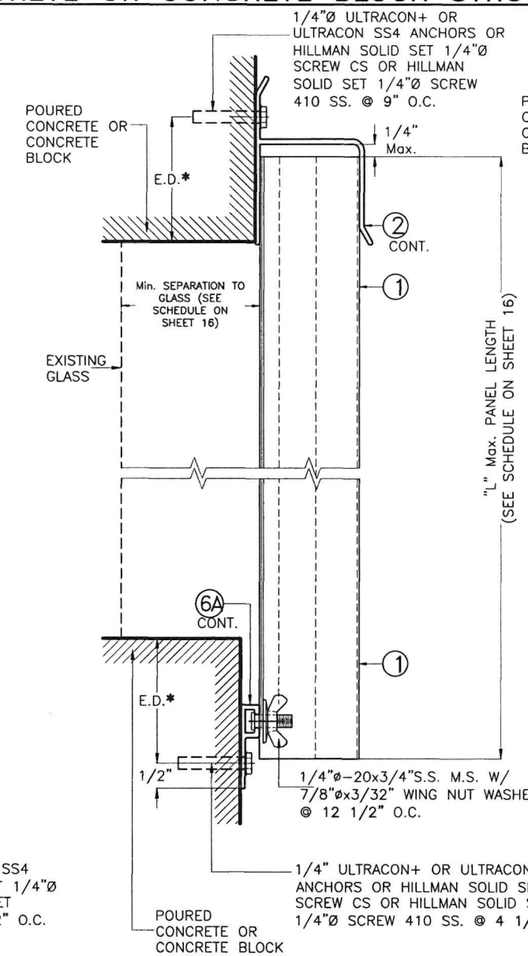

WALL MOUNTING INSTALLATION SECTION 4A @ REGULAR PANEL

SCALE 3/8"=1"

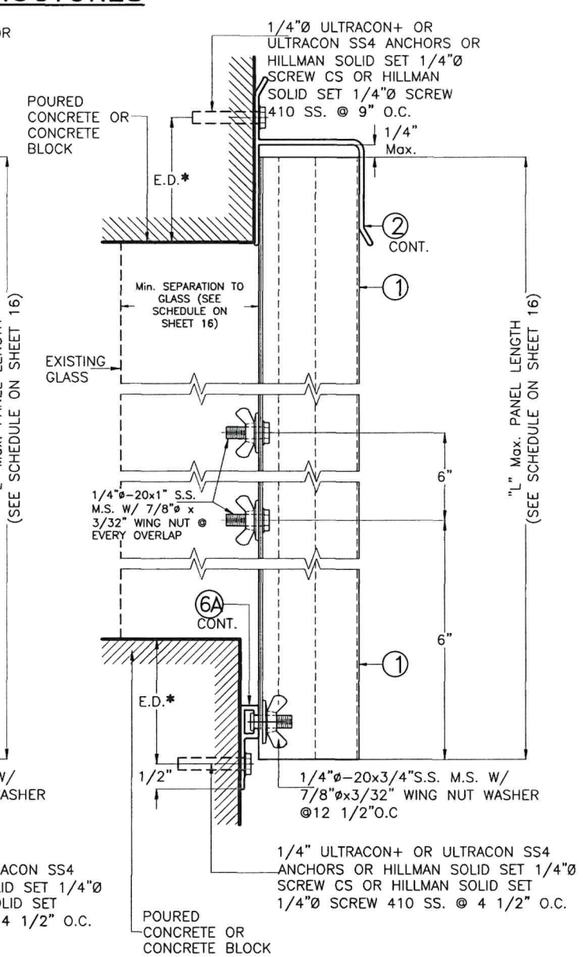

WALL MOUNTING INSTALLATION SECTION 4B @ LIFE SAFETY PANEL

SCALE 3/8"=1"

SEE SHEET 19 & 20 FOR ANCHORS TYPE & SPACING FOR INSTALLATIONS INTO WOOD FRAME BUILDING.
MINIMUM ANCHOR SPACINGS AND MINIMUM EDGE DISTANCE ARE INDICATED ON THIS SCHEDULE FOR E.D. LESS THAN INDICATED ON SCHEDULE REDUCE ANCHOR SPACING BY MULTIPLYING SPACING SHOWN ON SCHEDULE BY THE FOLLOWING FACTORS. FOR THIS OPERATION TO BE POSSIBLE, REDUCED SPACING OBTAINED USING FACTOR SHALL NOT BE LESS THAN MINIMUM SPACING INDICATED FOR EACH ANCHOR TYPE ON THIS SCHEDULE

ANCHOR TYPE		1/4"ø ULTRACON+	HILLMAN SOLID-SET 1/4" CS	HILLMAN SOLID-SET 1/4" 410 SS
Min. ANCHOR SPACING (in.)		3	3	3
*EDGE DISTANCE (E.D. Min.)	Concrete (in.)	3	3	3
	Concrete Block (in.)	3	3	3
ACTUAL E.D. (EDGE DISTANCE)		FACTOR		
1 1/2"		.35	–	–
2 1/2"		–	–	–
3"		1.00	–	–
3 1/2"		–	–	–

SEE SHEET 1A FOR MIN. EMBEDMENT OF ANCHORS.

WALTER A. TILLIT JR. LICENSE No. 44167 STATE OF FLORIDA PROFESSIONAL ENGINEER

P.E. SEAL/SIGNATURE/DATE

FLORIDA BUILDING CODE (High Velocity Hurricane Zone)

©2026 TILTECO, INC.

TILTECO INC.
TILLIT TESTING & ENGINEERING COMPANY
6355 N.W. 36th. St., Ste. 305, VIRGINIA GARDENS, Fl. 33166
Phone : (305) 871-1530 . Fax : (305) 871-1531
CA-0006719
WALTER A. TILLIT Jr., P.E.
FLORIDA Lic. # 44167

20 GAGE GALVANIZED STEEL STORM PANEL

GLOBAL PROTECTION PRODUCTS, LLC.
4800 S.W. 51 STREET
DAVIE, FL. 33314
PHONE: (954)689-7545, FAX: (954)689-8797

REV. No	DESCRIPTION	DATE	REV. No	DESCRIPTION	DATE
1	OLD 23-194	6/25/26	3	–	–
2			4	–	–

W.H.
DRAWN BY:

6/25/2026
DATE:

26-070
DRAWING No:

INSTALLATION DETAILS FOR OPTION #2 FOR LIFE SAFETY STORM PANEL SYSTEM INTO EXISTING POURED CONCRETE OR CONCRETE BLOCK STRUCTURES

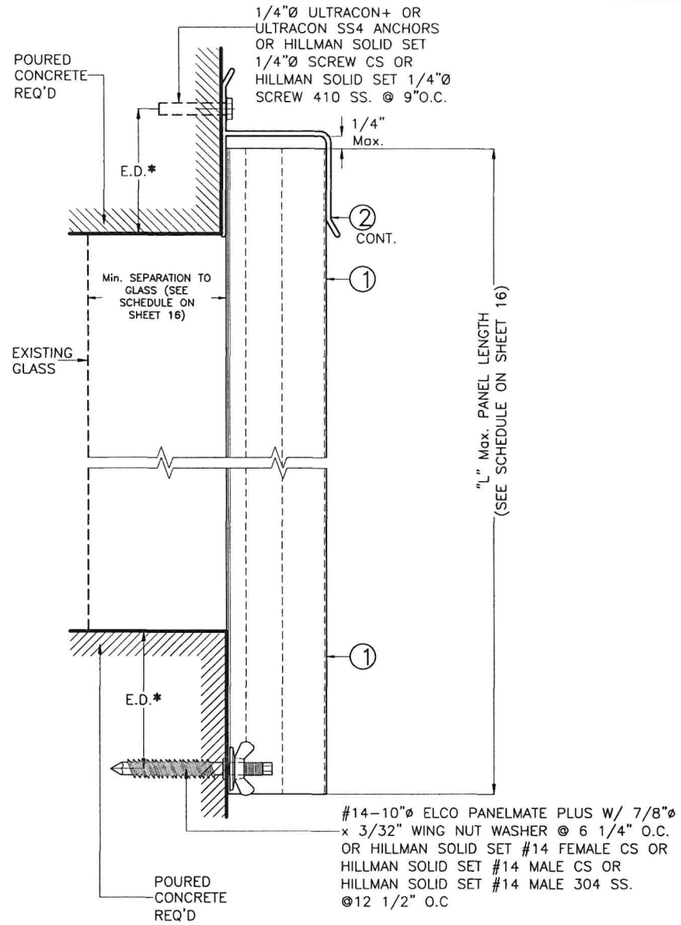

WALL MOUNTING INSTALLATION SECTION 5A @ REGULAR PANEL

SCALE 3/8"=1"

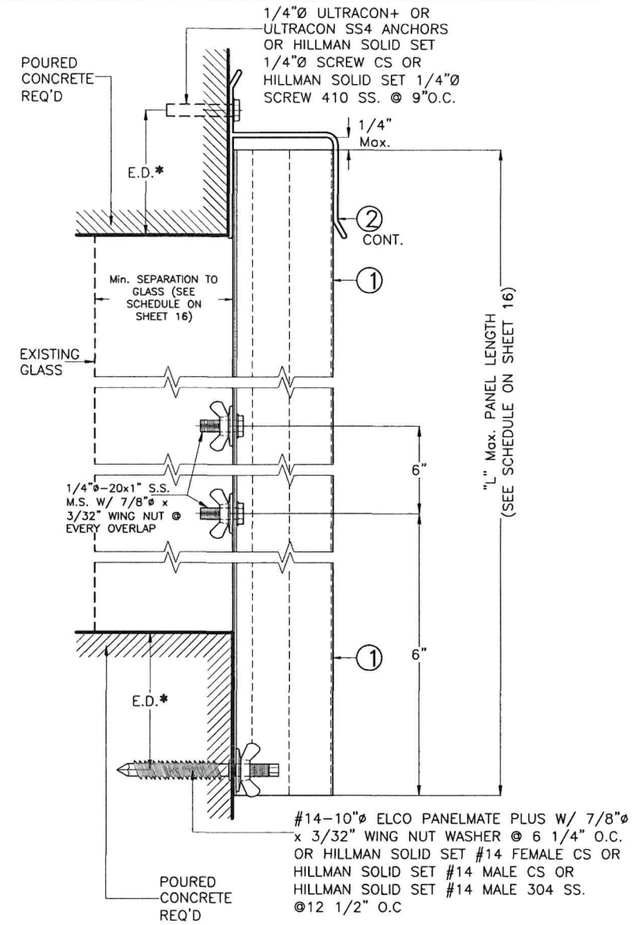

WALL MOUNTING INSTALLATION SECTION 5B @ LIFE SAFETY PANEL

SCALE 3/8"=1"

SEE SHEET 19 & 20 FOR ANCHORS TYPE & SPACING FOR INSTALLATIONS INTO WOOD FRAME BUILDING.
MINIMUM ANCHOR SPACINGS AND MINIMUM EDGE DISTANCE ARE INDICATED ON THIS SCHEDULE FOR E.D. LESS THAN INDICATED ON SCHEDULE REDUCE ANCHOR SPACING BY MULTIPLYING SPACING SHOWN ON SCHEDULE BY THE FOLLOWING FACTORS. FOR THIS OPERATION TO BE POSSIBLE, REDUCED SPACING OBTAINED USING FACTOR SHALL NOT BE LESS THAN MINIMUM SPACING INDICATED FOR EACH ANCHOR TYPE ON THIS SCHEDULE

ANCHOR TYPE		1/4"ø ULTRACON+ OR ULTRACON SS4	1/4"ø PANELMATE PLUS	HILLMAN SOLID-SET 1/4" CS	HILLMAN SOLID-SET #14 FEM. CS	HILLMAN SOLID-SET 1/4" 410 SS	HILLMAN SOLID-SET #14 MALE CS	HILLMAN SOLID-SET#14 MALE 304 SS
Min. ANCHOR SPACING (in.)		3	3	3	3	3	3	3
*EDGE DISTANCE (E.D. Min.)	Concrete (in.)	3	3	3	3	3	3	3
	Concrete Block (in.)	3	3 1/2	3	3	3	3	3
ACTUAL E.D. (EDGE DISTANCE)		FACTOR						
1 1/2"		.35	–	–	–	–	–	–
2 1/2"		–	–	–	–	–	–	–
3"		1.00	1.00	–	–	–	–	–
3 1/2"		–	–	–	–	–	–	–

SEE SHEET 1A FOR MIN. EMBEDMENT OF ANCHORS.

WALTER A. TILLIT JR. LICENSE No. 44167 STATE OF FLORIDA PROFESSIONAL ENGINEER

P.E. SEAL/SIGNATURE/DATE

©2026 TILTECO, INC.

TILTECO INC.
TILLIT TESTING & ENGINEERING COMPANY
6355 N.W. 36th. St., Ste. 305, VIRGINIA GARDENS, Fl. 33166
Phone : (305) 871-1530 . Fax : (305) 871-1531
CA-0006719
WALTER A. TILLIT Jr., P.E.
FLORIDA Lic. # 44167

FLORIDA BUILDING CODE (High Velocity Hurricane Zone)

20 GAGE GALVANIZED STEEL STORM PANEL

GLOBAL PROTECTION PRODUCTS, LLC.
4800 S.W. 51 STREET
DAVIE, FL. 33314
PHONE: (954)689-7545, FAX: (954)689-8797

REV. No	DESCRIPTION	DATE	REV. No	DESCRIPTION	DATE
1	OLD 23-194	6/25/26	3	–	–
2			4	–	–

W.H.
DRAWN BY:

6/25/2026
DATE:

26-070
DRAWING No:

INSTALLATION DETAILS FOR OPTION #2 FOR LIFE SAFETY STORM PANEL SYSTEM INTO EXISTING WOOD STRUCTURES

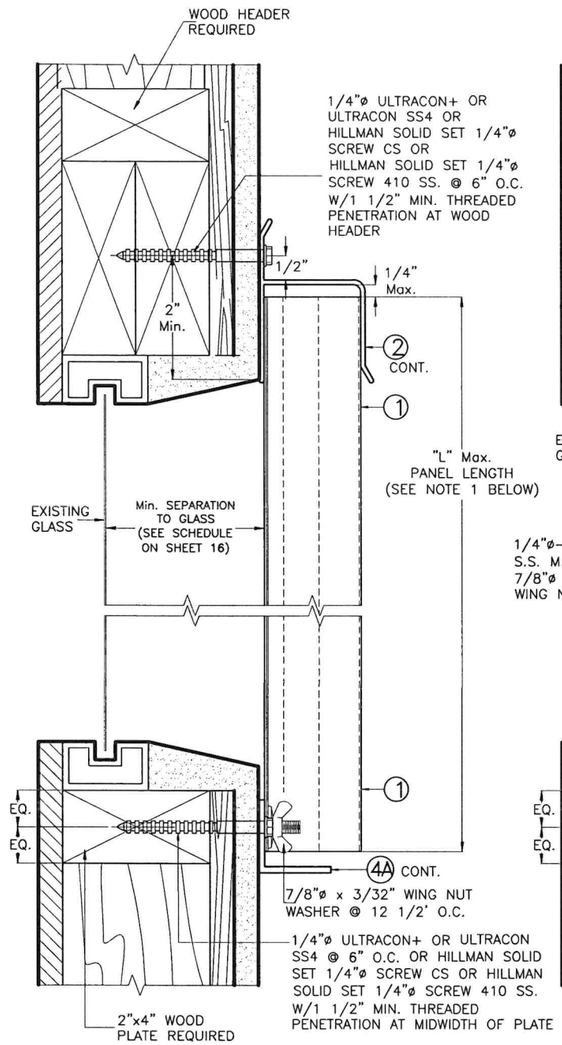

WALL MOUNTING INSTALLATION ALTERNATIVE 6AW @ REGULAR PANEL

SCALE 3/8"=1"

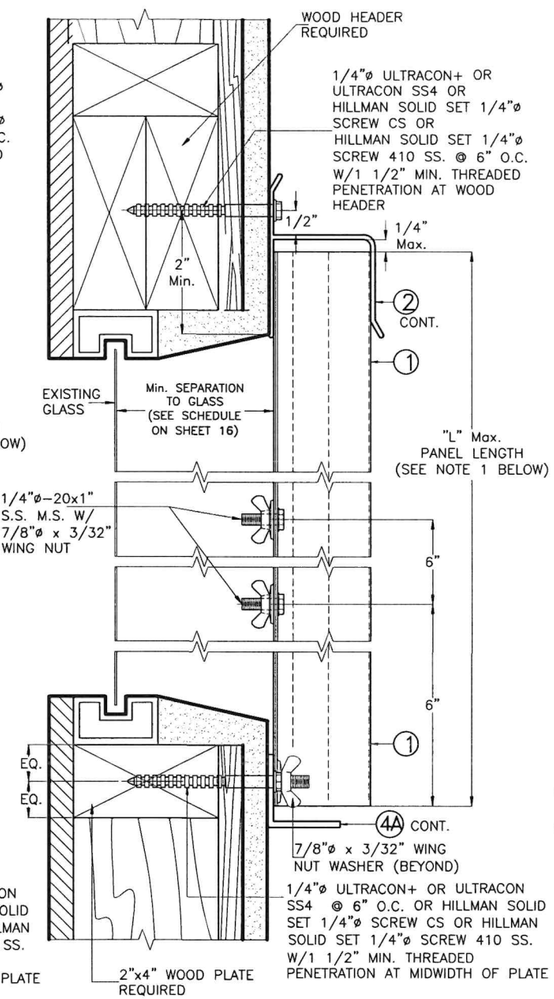

WALL MOUNTING INSTALLATION ALTERNATIVE 6BW @ LIFE SAFETY PANEL

SCALE 3/8"=1"

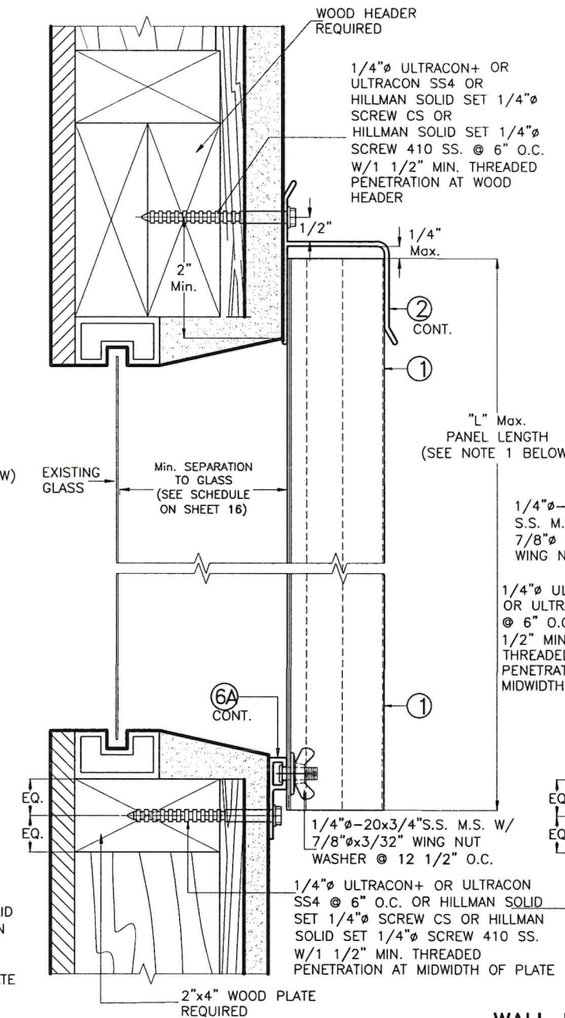

WALL MOUNTING INSTALLATION ALTERNATIVE 7AW @ REGULAR PANEL

SCALE 3/8"=1"

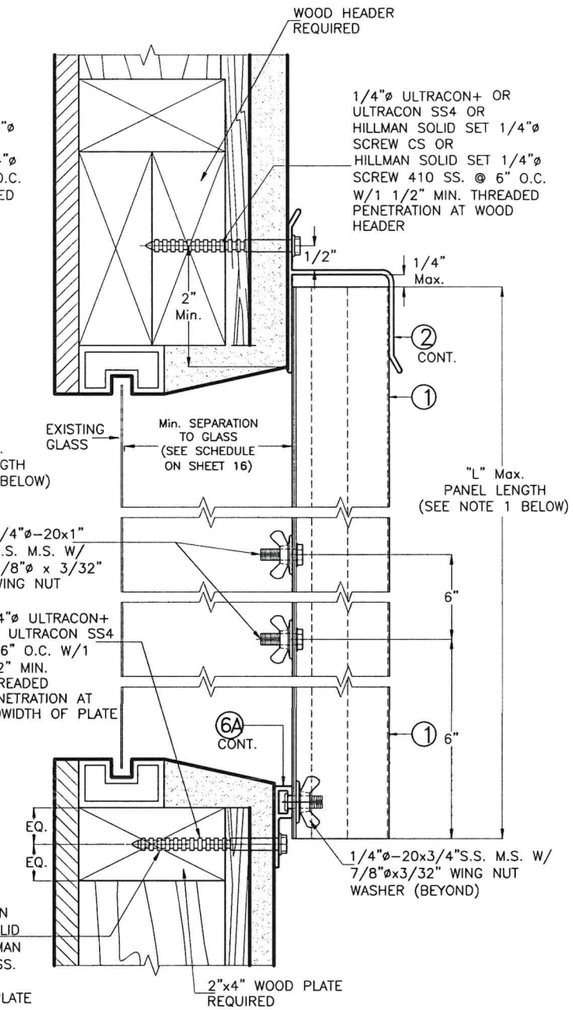

WALL MOUNTING INSTALLATION ALTERNATIVE 7BW @ LIFE SAFETY PANEL

SCALE 3/8"=1"

NOTES:

1. INSTALLATIONS ARE ONLY VALID FOR BUILDINGS WITH A.S.D. DESIGN LOADS UP TO +55.5, −72.0 PSF AND PANEL'S LENGTH UP TO 8'−8".
2. FOR NEW WOOD FRAME CONSTRUCTION: WOOD MEMBERS TO BE SOUTHERN PINE NO. 2, W/ SPECIFIC DENSITY OF 0.55 OR EQUAL.

FLORIDA BUILDING CODE (High Velocity Hurricane Zone)

WALTER A. TILLIT JR. LICENSE No. 44167 STATE OF FLORIDA PROFESSIONAL ENGINEER

P.E. SEAL/SIGNATURE/DATE

©2026 TILTECO, INC.

TILTECO INC.
TILLIT TESTING & ENGINEERING COMPANY
6355 N.W. 36th. St., Ste. 305, VIRGINIA GARDENS, Fl. 33166
Phone : (305) 871-1530 . Fax : (305) 871-1531
CA-0006719
WALTER A. TILLIT Jr., P.E.
FLORIDA Lic. # 44167

20 GAGE GALVANIZED STEEL STORM PANEL

GLOBAL PROTECTION PRODUCTS, LLC.
4800 S.W. 51 STREET
DAVIE, FL. 33314
PHONE: (954)689-7545, FAX: (954)689-8797

REV. No	DESCRIPTION	DATE	REV. No	DESCRIPTION	DATE
1	OLD 23-194	6/25/26	3	–	–
2			4	–	–

W.H.
DRAWN BY:

6/25/2026
DATE:

26-070
DRAWING No:

SHEET 19 OF 26

INSTALLATION DETAILS FOR OPTION #2 FOR LIFE SAFETY STORM PANEL SYSTEM INTO EXISTING WOOD STRUCTURES

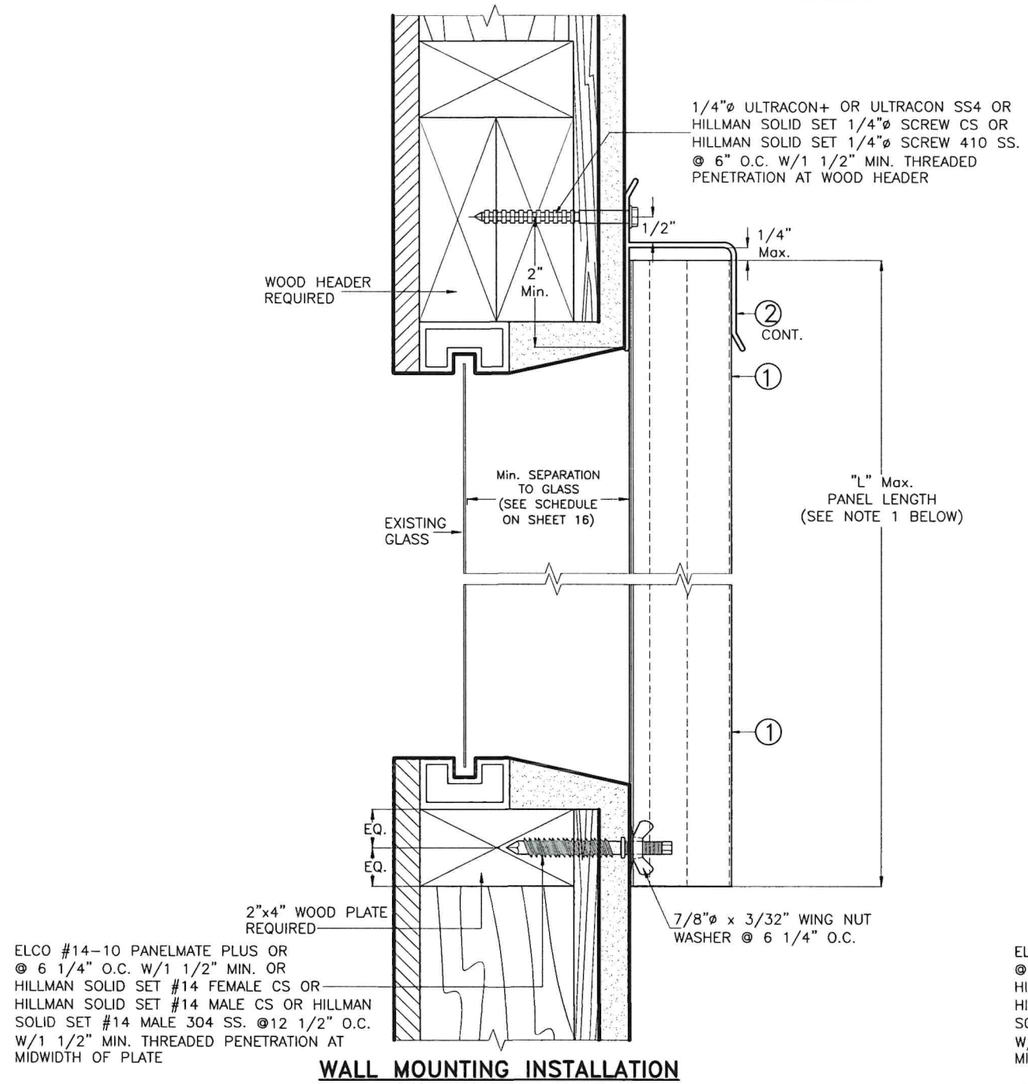

WALL MOUNTING INSTALLATION ALTERNATIVE 8AW @ REGULAR PANEL

SCALE 3/8"=1"

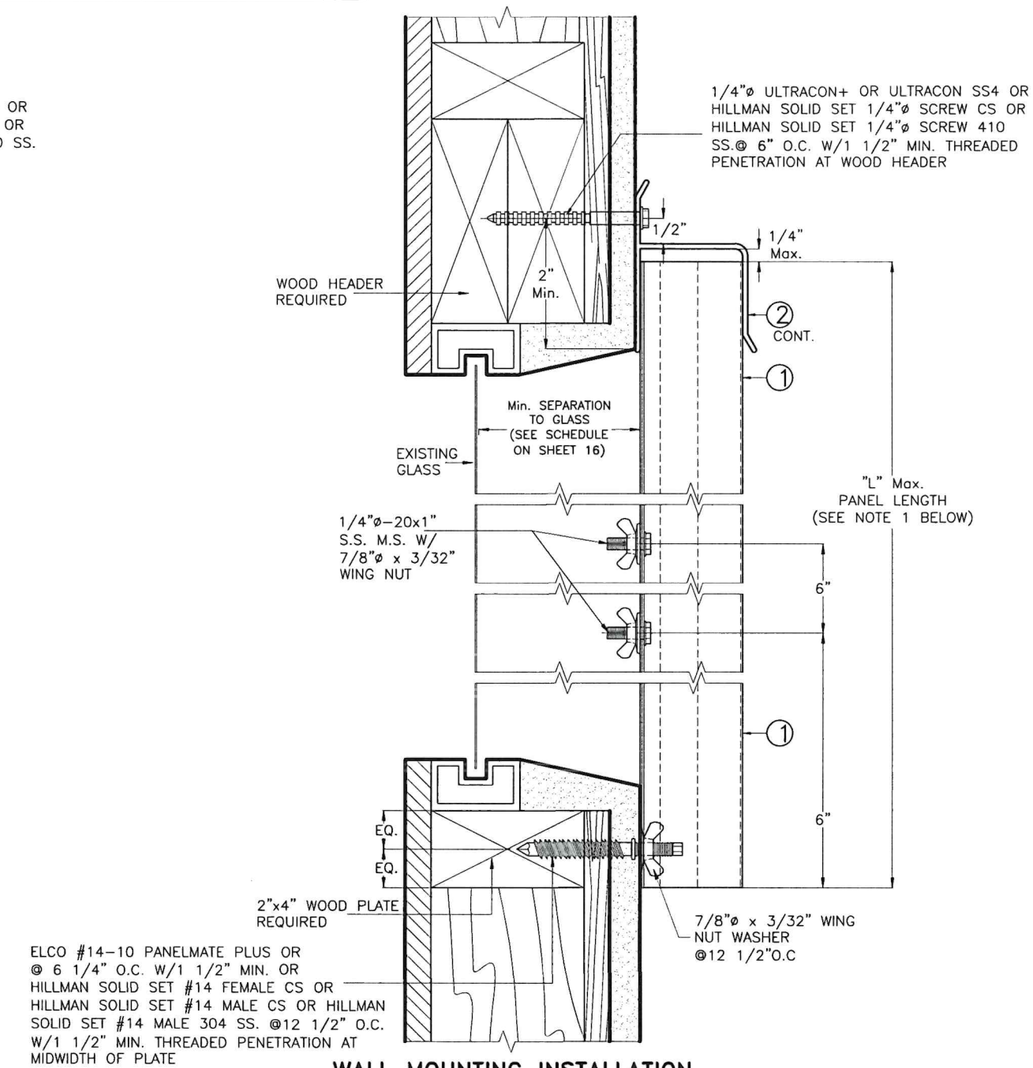

WALL MOUNTING INSTALLATION ALTERNATIVE 8BW @ LIFE SAFETY PANEL

SCALE 3/8"=1"

FLORIDA BUILDING CODE (High Velocity Hurricane Zone)

NOTES:

1. INSTALLATIONS ARE ONLY VALID FOR BUILDINGS WITH A.S.D. DESIGN LOADS UP TO +55.5, −72.0 PSF AND PANEL'S LENGTH UP TO 8'−8".
2. FOR NEW WOOD FRAME CONSTRUCTION: WOOD MEMBERS TO BE SOUTHERN PINE NO. 2, W/ SPECIFIC DENSITY OF 0.55 OR EQUAL.

WALTER A. TILLIT JR. LICENSE No. 44167 STATE OF FLORIDA PROFESSIONAL ENGINEER

2/17/2026

P.E. SEAL/SIGNATURE/DATE

©2026 TILTECO, INC.

TILTECO INC.
TILLIT TESTING & ENGINEERING COMPANY
6355 N.W. 36th. St., Ste. 305, VIRGINIA GARDENS, Fl. 33166
Phone : (305) 871-1530 . Fax : (305) 871-1531
CA-0006719
WALTER A. TILLIT Jr., P.E.
FLORIDA Lic. # 44167

20 GAGE GALVANIZED STEEL STORM PANEL

GLOBAL PROTECTION PRODUCTS, LLC.
4800 S.W. 51 STREET
DAVIE, FL. 33314
PHONE: (954)689-7545, FAX: (954)689-8797

REV. No	DESCRIPTION	DATE	REV. No	DESCRIPTION	DATE
1	OLD 23-194	6/25/26	3	–	–
2			4	–	–

W.H.
DRAWN BY:

6/25/2026
DATE:

26-070
DRAWING No:

SHEET 20 OF 26

GENERAL NOTES: VALID E–Z HANG STORM PANEL SYSTEM

1. E–Z HANG STORM PANEL SHOWN ON THIS PRODUCT EVALUATION DOCUMENT (P.E.D.) HAS BEEN VERIFIED FOR COMPLIANCE IN ACCORDANCE WITH THE 2026 (9th EDITION) OF THE FLORIDA BUILDING CODE.

   DESIGN WIND LOADS SHALL BE DETERMINED AS PER SECTION 1620 OF THE ABOVE MENTIONED CODE, FOR A WIND SPEED AS REQUIRED BY THE JURISDICTION WHERE THESE SHUTTERS WILL BE INSTALLED AND FOR A DIRECTIONALITY FACTOR Kd=0.85. USING ASCE 7–22 AND SHALL NOT EXCEED THE MAXIMUM (A.S.D.) DESIGN PRESSURE RATINGS INDICATED ON SHEETS 25 & 26.

   IN ORDER TO VERIFY THE ABOVE CONDITION, ULTIMATE DESIGN WIND LOADS DETERMINED PER ASCE 7–22 SHALL BE FIRST REDUCED TO A.S.D. DESIGN WIND LOADS BY MULTIPLYING THEM BY 0.6 IN ORDER TO TO COMPARE THESE W/ MAX. (A.S.D) DESIGN PRESSURE RATINGS INDICATED ON SHEETS 25 & 26.

   IN ORDER TO VERIFY THAT COMPONENTS AND ANCHORS ON THIS P.E.D. AS TESTED WERE NOT OVER STRESSED, A 33% INCREASE IN ALLOWABLE STRESS FOR WIND LOADS WAS NOT USED IN THEIR ANALYSIS. FASTENERS SPACING TO WOOD HAS BEEN DETERMINED IN ACCORDANCE WITH ANSI/AWC NDS–24.

   STORM PANEL'S ADEQUACY FOR IMPACT AND FATIGUE RESISTANCE HAS BEEN VERIFIED IN ACCORDANCE WITH SECTION 1626 OF THE ABOVE MENTIONED CODE AS PER FENESTRATION TESTING LABORATORY, INC. REPORT # 2032, AS PROTOCOLS TAS–201, TAS–202 AND TAS–203. IMPACT MISSILE IS 9Lb, 2"X4" 50ft/Sec.

2. THIS SYSTEM HAS BEEN DESIGNED TO BE INSTALLED ON THE OUTSIDE OF THE OPENING ACCESSING THE OPENING FROM THE INSIDE W/O THE USE OF A LADDER OR LIFT. THIS APPLICATION IS VALID WHEN INSTALLATION IS INTENDED TO BE PERFORMED FROM THE INSIDE OF STRUCTURE.

3. SERIES 1000 INSTALLATION IS APPLICABLE TO SINGLE AND DOUBLE HUNG STYLE WINDOWS WHEN INSTALLATION IS REQUIRED TO BE PERFORMED FROM THE INSIDE OF STRUCTURE.

4. SERIES 2000 INSTALLATION IS APPLICABLE TO SINGLE AND DOUBLE HUNG AND HORIZONTAL SLIDERS STYLE WINDOWS WHEN INSTALLATION IS REQUIRED TO BE PERFORMED FROM THE INSIDE OF STRUCTURE.

5. ALL ALUMINUM EXTRUSIONS TO BE 6063–T6 ALLOY AND TEMPER. (UNLESS OTHERWISE NOTED). ALL ALUMINUM EXTRUSIONS IN CONTACT WITH DISSIMILAR MATERIAL SHALL COMPLY WITH SECTION III–6 OF THE 2020 ALUMINUM DESING MANUAL.

6. ALL ALUMINUM SHEET METAL USED AT CLOSURES SHALL HAVE 3105–H14 ALLOY.

7. ALL STEEL SHEET METAL PANELS SHALL HAVE STRUCTURAL QUALITY STEEL, ASTM A–653 GRADE 50 Min., GALVANIZED STEEL DESIGNATION W/Fy= 58.5 ksi (AFTER ROLLED).

8. ALL SCREWS TO BE STAINLESS STEEL 304 OR 316 AISI SERIES OR CORROSION RESISTANT COATED CARBON STEEL AS PER DIN 50018 W/ 50 ksi YIELD STRENGTH AND 90 ksi TENSILE STRENGTH & SHALL COMPLY W/ FLORIDA BUILDING CODE SECTIONS 2411.3.3.4 & 1711.

9. BOLTS TO BE ASTM A–307 GALVANIZED STEEL, OR AISI 304 SERIES STAINLESS STEEL, WITH 36 ksi MINIMUM YIELD STRENGTH.

10. ANCHORS SHALL BE AS FOLLOWS, AS PER SPECIFICATIONS OF SHEET 21A

11. IT SHALL BE THE RESPONSIBILITY OF THE CONTRACTOR TO VERIFY THE SOUNDNESS OF THE STRUCTURE WHERE SHUTTER IS TO BE ATTACHED TO INSURE PROPER ANCHORAGE. THIS SHUTTER SHALL ONLY BE ATTACHED TO CONCRETE, BLOCK OR WOOD FRAME BUILDINGS.

12. THE INSTALLATION CONTRACTOR IS TO SEAL/CAULK ALL SHUTTER COMPONENT EDGES WHICH REMAIN IN CONTINUOUS CONTACT WITH THE BUILDING TO PREVENT WIND/RAIN INTRUSION. CAULK AND SEAL SHUTTER TRACKS ALL AROUND FULL LENGTH.

13. STORM PANEL INSTALLATION SHALL COMPLY WITH SPECS INDICATED IN THIS DRAWING PLUS ANY BUILDING AND ZONING REGULATIONS PROVIDED BY THE JURISDICTION WHERE PERMIT IS APPLIED TO.

14. ATRIUM WINDOWS AND DOORS, INC. E – Z HANG STORM PANEL SYSTEM™ IS **PATENT PENDING.**

15. (a) THIS PRODUCT EVALUATION DOCUMENT (P.E.D.) PREPARED BY THIS ENGINEER IS GENERIC AND DOES NOT PROVIDE INFORMATION FOR A SITE SPECIFIC PROJECT; i.e. WHERE THE SITE CONDITIONS DEVIATE FROM THE P.E.D.

    (b) CONTRACTOR TO BE RESPONSIBLE FOR THE SELECTION, PURCHASE AND INSTALLATION INCLUDING LIFE SAFETY OF THIS PRODUCT BASED ON THIS P.E.D. PROVIDED HE/SHE DOES NOT DEVIATE FROM THE CONDITIONS DETAILED ON THIS DOCUMENT. CONSTRUCTION SAFETY AT SITE IS THE CONTRACTOR'S RESPONSIBILITY.

    (c) THIS PRODUCT EVALUATION DOCUMENT WILL BE CONSIDERED INVALID IF MODIFIED.

    (d) SITE SPECIFIC PROJECTS SHALL BE PREPARED BY A FLORIDA REGISTERED ENGINEER OR ARCHITECT WHICH WILL BECOME THE ENGINEER OF RECORD (E.O.R.) FOR THE PROJECT AND WHO WILL BE RESPONSIBLE FOR THE PROPER USE OF THE P.E.D. ENGINEER OF RECORD, ACTING AS A DELEGATED ENGINEER TO THE P.E.D. ENGINEER, SHALL SUBMIT TO THIS LATTER THE SITE SPECIFIC DRAWINGS FOR REVIEW.

    (e) THIS P.E.D. SHALL BEAR THE DATE AND ORIGINAL SEAL AND SIGNATURE OF THE PROFESSIONAL ENGINEER OF RECORD THAT PREPARED IT.

16. STORM PANEL MANUFACTURER'S LABEL SHALL BE LOCATED ON A READILY VISIBLE LOCATION AT STORM PANEL IN ACCORDANCE WITH SECTION 1709.9.3 OF FLORIDA BUILDING CODE. ONE LABEL SHALL BE PLACED FOR EVERY OPENING. LABELING TO COMPLY WITH SECTION 1709.9.2 OF THE FLORIDA BUILDING CODE.

WALTER A. TILLIT JR. LICENSE No 44167 STATE OF FLORIDA PROFESSIONAL ENGINEER

P.E. SEAL/SIGNATURE/DATE

FLORIDA BUILDING CODE (High Velocity Hurricane Zone)

©2026 TILTECO, INC.

TILTECO INC.
TILLIT TESTING & ENGINEERING COMPANY
6355 N.W. 36th. St., Ste. 305, VIRGINIA GARDENS, Fl. 33166
Phone : (305) 871–1530 . Fax : (305) 871–1531
CA–0006719
WALTER A. TILLIT Jr., P.E.
FLORIDA Lic. # 44167

20 GAGE GALVANIZED STEEL STORM PANEL

GLOBAL PROTECTION PRODUCTS, LLC.
4800 S.W. 51 STREET
DAVIE, FL. 33314
PHONE: (954)689–7545, FAX: (954)689–8797

REV. No	DESCRIPTION	DATE	REV. No	DESCRIPTION	DATE
1	OLD 23–194	6/25/26	3	–	–
2			4	–	–

W.H.
DRAWN BY:

6/25/2026
DATE:

26–070
DRAWING No:

ANCHOR SCHEDULE *

ANCHOR NAME	MANUFACTURED BY:	ANCHOR DIMENSIONS	MIN. EMBEDMENT				MIN. E.D			
			CONCRETE	GROUT FILLED	HOLLOW BLOCK	WOOD	CONCRETE	GROUT FILLED	HOLLOW BLOCK	WOOD
ULTRACON+ OR ULTRACON SS4	DEWALT	1/4"Ø	1 3/4"	–	1 1/4"	1 1/2"	2 1/2"	–	2 1/2"	SEE NOTE 5
PANELMATE FEMALE ID	ELCO CONSTRUCTION PRODUCTS	#14–10	2"	–	1 1/4"	1 7/8"	2 1/2"	–	3"	–
PANELMATE PLUS	ELCO CONSTRUCTION PRODUCTS	#14–10	2"	–	1 1/4"	1 7/8"	2 1/2"	–	3"	–
LAG SCREW	N.S.D	1/4"Ø	–	–	–	1 1/2"	–	–	–	SEE NOTE 5
SOLID SET 1/4" SCREW CS.	THE HILLMAN GROUP, INC.	1/4"Ø	1 3/4"	1 3/4"	1 1/4"	1 1/2"	3"	3"	3"	0.75"
SOLID SET #14 FEMALE ANCHOR CS.	THE HILLMAN GROUP, INC.	1/4"Ø	1 3/4"	1 3/4"	1 1/4"	1 1/2"	3"	3"	3"	0.75"
SOLID SET 1/4" SCREW 410 SS.	THE HILLMAN GROUP, INC.	1/4"Ø	1 3/4"	1 3/4"	1 1/4"	1 1/2"	3"	3"	3"	0.75"
SOLID SET #14 MALE ANCHOR CS.	THE HILLMAN GROUP, INC.	1/4"Ø	1 3/4"	1 3/4"	1 1/4"	1 1/2"	3"	3"	3"	0.75"
SOLID SET #14 MALE ANCHOR 304 SS.	THE HILLMAN GROUP, INC.	1/4"Ø	1 3/4"	1 3/4"	1 1/4"	1 1/2"	3"	3"	3"	0.75"

* NOTES:

1. CONCRETE TO BE:
   3192 psi FOR: TAPCON

   3000 Psi FOR: ALL POINT SOLID SET/ CALK–IN / THE HILLMAN SOLID SET SCREW CS / THE HILLMAN SOLID SET FEMALE CS /THE HILLMAN SOLID SET SCREW 410 SS/ THE HILLMAN SOLID SET MALE CS / THE HILLMAN SOLID SET MALE 304 SS

   3350 psi FOR: ELCO PANELMATE FEMALE/ ELCO PANELMATE PLUS

2. HOLLOW BLOCK & GROUT BLOCK TO BE ASTM C–90

3. WOOD TO BE SOUTHERN PINE #2 W/ G=0.55

4. ALL CARBON STEEL CREW ANCHORS SHALL BE SAE 1022 PER SAE J1933. ALL STAINLESS STEEL SCREW ANCHORS SHALL BE SERIES 410 OR SERIES 304 AS SPECIFIED HEREIN. CARBON STEEL SCREWS SHALL HAVE THE FOLLOWING CORROSION–PROTECTIVE COATINGS:

   BASE COAT: GALVANIZED
   TOP COAT: ORGANIC COATING (COLOR MAY VARY)
   SEE GENERAL NOTE 8 ON SHEET 21.

5. AS SHOWN ON SHEETS 26. MUST BE GALVANIZED STEEL PER ASTM B–117 W/ 1000 hrs.

6. E.D & EMBEDMENT FOR CONCRETE & MASONRY ANCHORS ARE MEASURED BEYOND ANY FINISH. IN CASE THAT PRECAST STONE, PRECAST CONCRETE PANELS, PAVERS, STUCCO OR WOOD BOARDS BE FOUND ON THE EXISTING WALL OR FLOOR, ANCHORS SHALL BE LONG ENOUGH TO REACH THE MAIN STRUCTURE BEHIND SUCH PANELS.

7. ANCHORS SHALL BE INSTALLED IN ACCORDANCE WITH THE ANCHOR MANUFACTURER'S SPECIFICATIONS & INSTRUCTIONS. ONLY STAINLESS STEEL ANCHORS ARE ALLOWED AT INSTALLATIONS WITHIN 300 ft FROM COASTAL SHORELINE.

8. ALL GROUT SHALL BE MIN. f'c=2ksi.

WALTER A. TILLIT JR. LICENSE No. 44167 STATE OF FLORIDA PROFESSIONAL ENGINEER

3/2/2026

P.E. SEAL/SIGNATURE/DATE

©2026 TILTECO, INC.

TILTECO INC.
TILLIT TESTING & ENGINEERING COMPANY
6355 N.W. 36th. St., Ste. 305, VIRGINIA GARDENS, Fl. 33166
Phone : (305) 871–1530 . Fax : (305) 871–1531
CA–0006719
WALTER A. TILLIT Jr., P.E.
FLORIDA Lic. # 44167

FLORIDA BUILDING CODE (High Velocity Hurricane Zone)

20 GAGE GALVANIZED STEEL STORM PANEL

GLOBAL PROTECTION PRODUCTS, LLC.
4800 S.W. 51 STREET
DAVIE, FL. 33314
PHONE: (954)689–7545, FAX: (954)689–8797

REV. No	DESCRIPTION	DATE	REV. No	DESCRIPTION	DATE
1	OLD 23–194	6/25/26	3	–	–
2			4	–	–

W.H.
DRAWN BY:

6/25/2026
DATE:

26–070
DRAWING No:

COMPONENTS FOR SERIES 2000 & 1000 E-Z HANG STORM PANELS

(SCALE 1/2=1")

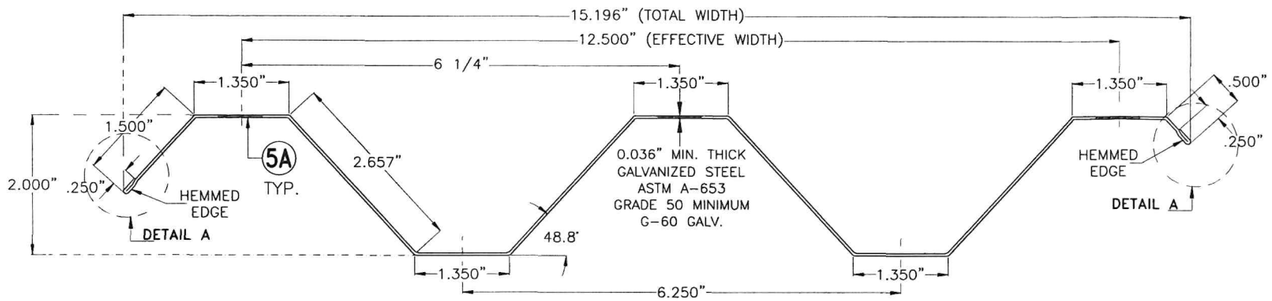

① STORM PANEL

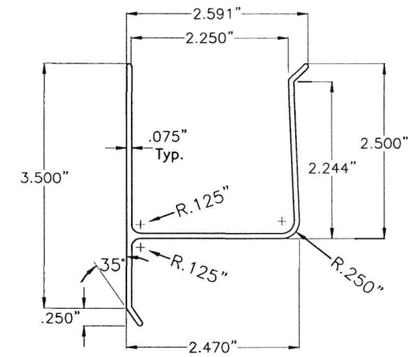

② REVERSED "h" TRACK

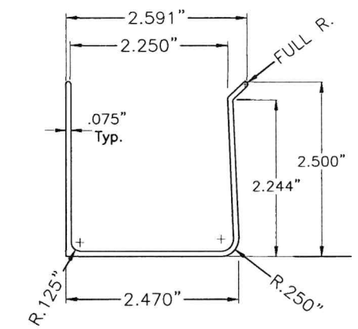

③ REVERSED "U" TRACK

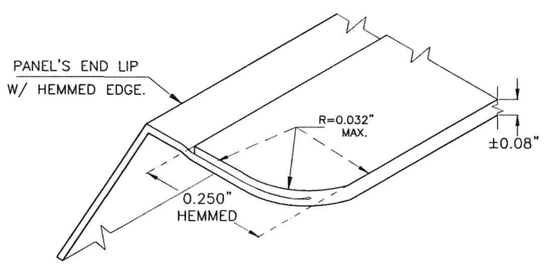

ISOMETRIC VIEW DETAIL A

ROUNDED CORNER @ ENDS OF PANEL'S END LIP W/ HEMMED EDGE.
(N.T.S)

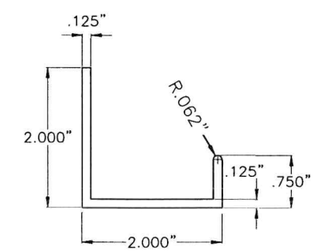

④ "J" TRACK

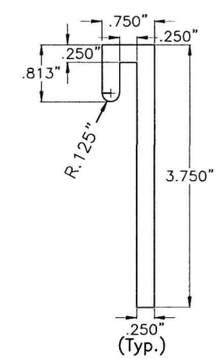

⑤ PANEL HANGER
1 1/4" WIDE
6061-T6 Alum. ALLOY

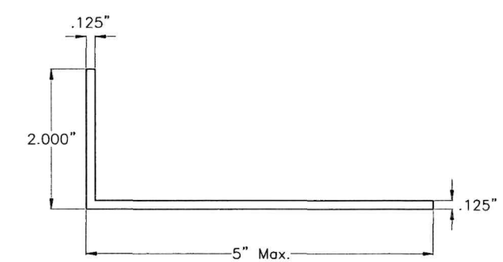

⑥ 2"x5"(Max.) ALUM. ANGLE

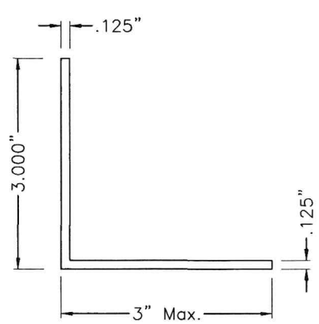

⑦ 3"x3"(Max.) ALUM. ANGLE

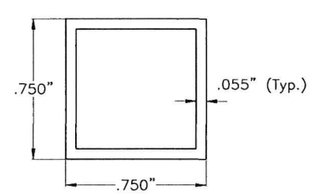

⑧ STOP BAR
11" LONG
6063-T5 Alum. ALLOY

WALTER A. TILLIT JR. LICENSE No. 44167 STATE OF FLORIDA PROFESSIONAL ENGINEER

P.E. SEAL/SIGNATURE/DATE

FLORIDA BUILDING CODE (High Velocity Hurricane Zone)

©2026 TILTECO, INC.

TILTECO INC.
TILLIT TESTING & ENGINEERING COMPANY
6355 N.W. 36th. St., Ste. 305, VIRGINIA GARDENS, Fl. 33166
Phone : (305) 871-1530 . Fax : (305) 871-1531
CA-0006719
WALTER A. TILLIT Jr., P.E.
FLORIDA Lic. # 44167

20 GAGE GALVANIZED STEEL STORM PANEL

GLOBAL PROTECTION PRODUCTS, LLC.
4800 S.W. 51 STREET
DAVIE, FL. 33314
PHONE: (954)689-7545, FAX: (954)689-8797

REV. No	DESCRIPTION	DATE	REV. No	DESCRIPTION	DATE
1	OLD 23-194	6/25/26	3	–	–
2			4	–	–

W.H.
DRAWN BY:

6/25/2026
DATE:

26-070
DRAWING No:

SHEET 22 OF 26

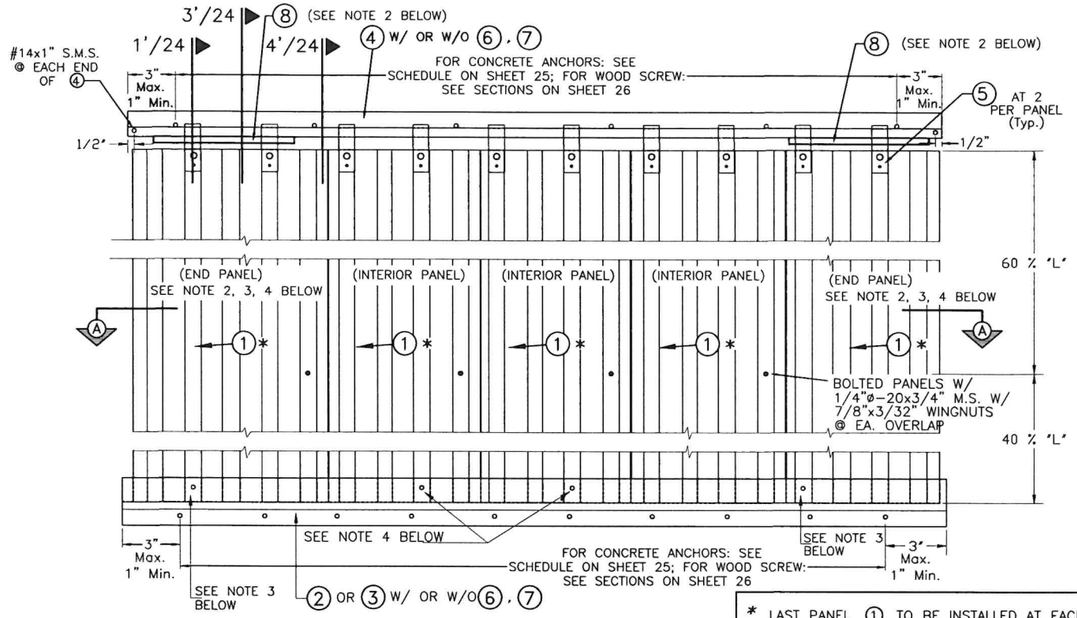

TYPICAL ELEVATION FOR SERIES 2000 E-Z HANG STORM PANEL (1) SYSTEM

SCALE 3/32" = 1"

* LAST PANEL (1) TO BE INSTALLED AT EACH OPENING SHALL ALWAYS BE PROVIDED W/ REAR HANDLE TO FACILITATE INSTALLATION IF INTENDED TO BE INSTALLED FROM INSIDE OF STRUCTURE.

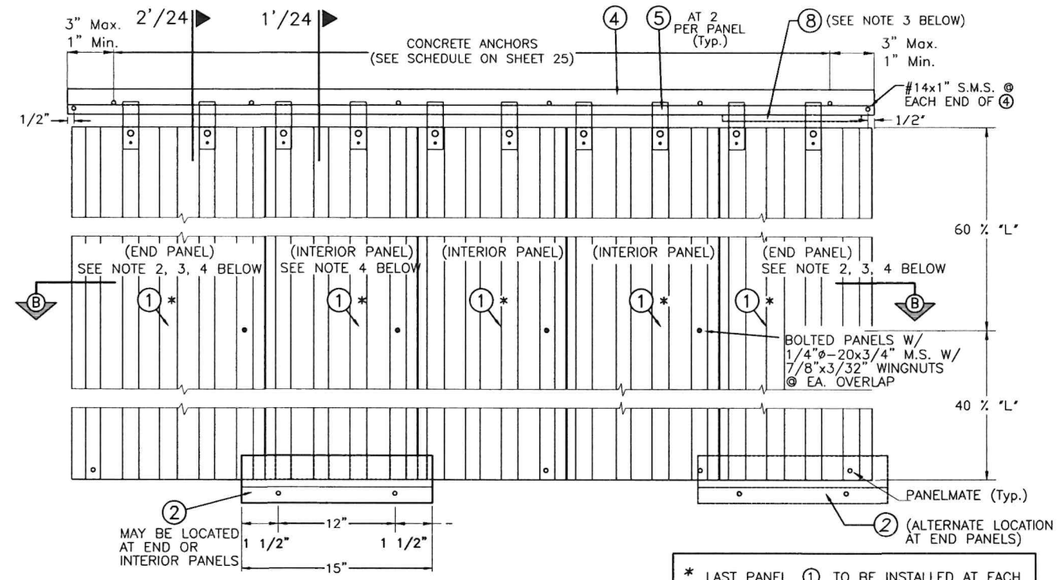

TYPICAL ELEVATION FOR SERIES 1000 E-Z HANG STORM PANEL (1) SYSTEM

SCALE 3/32" = 1"

* LAST PANEL (1) TO BE INSTALLED AT EACH OPENING SHALL ALWAYS BE PROVIDED W/ REAR HANDLE TO FACILITATE INSTALLATION IF INTENDED TO BE INSTALLED FROM INSIDE OF STRUCTURE.

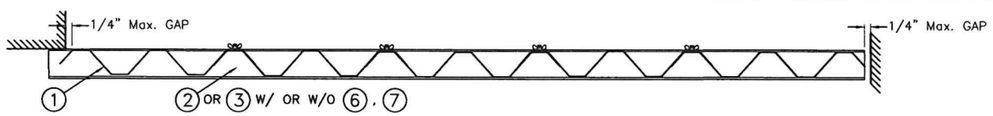

SECTION A-A

SCALE 3/32" = 1"

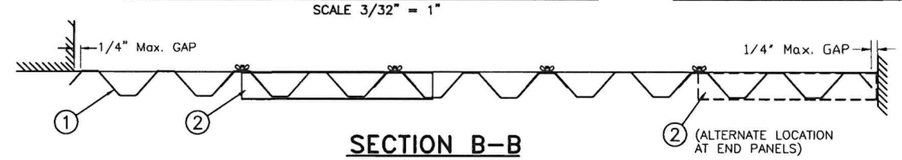

SECTION B-B

SCALE 3/32" = 1"

NOTES :

(1). DEFINITION OF SERIES 2000: E – Z HANG STORM PANEL SYSTEM CONSISTING OF PANEL + Cont. TRACKS TOP & BOTTOM.

(2). END PANELS SHALL ALWAYS BE CONNECTED TO BOTTOM TRACK OTHERWISE A STOP BAR (8) SHALL BE PROVIDED AT TOP OF SUCH PANELS.

(3). IF END PANELS ARE CONNECTED TO BOTTOM TRACK, CONNECTION SHALL CONSIST OF 1/4"ø-20x3/4" M.S. W/ 7/8"øx3/32" WING NUT OR 1/4"øx3/4" Min. THUMBSCREW INTO TAPPED BOTTOM TRACK. LOCATION OF FASTENERS MAY BE AT EITHER OF TWO EXTERIOR FLAT FLANGES OF END PANEL.

(4). IN CASE THAT END PANELS ARE NOT CONNECTED TO BOTTOM TRACK (i.e. A STOP BAR IS ONLY USED AT TOP) AT LEAST TWO PANELS SHALL BE CONNECTED TO BOTTOM TRACK USING SPECS INDICATED ON NOTE (3) ABOVE. IN SUCH CASE, CONNECTION OF PANELS TO BOTTOM TRACK MAY OCCUR AT ANY PANEL LOCATION.

(5). SEE SECTION 1', 3' & 4' ON SHEET 24. SEE ANCHOR SCHEDULE ON SHEET 25.

NOTES :

(1). DEFINITION OF SERIES 1000: E – Z HANG STORM PANEL SYSTEM CONSISTING OF PANEL + Cont. TRACKS AT TOP & PANELMATE PLUS OR 15" LONG (2) AT BOTTOM W/ PANELMATES.

(2). END PANELS SHALL ALWAYS BE CONNECTED TO EXISTING SILL WALL BY MEANS OF ELCO OR HILLMAN'S PANELMATES OR, IF USED JOINTLY W/ 15" LONG (2) TRACK AT BOTTOM, END PANELS SHALL BE CONNECTED TO (2) W/ 1/4"ø-20x3/4" M.S. W/ 7/8"øx3/32" WING NUT OR 1/4"ø-20x3/4" Min. THUMBSCREW INTO TAPPED (2) (EXCEPT AS DESCRIBED ON NOTE (3) BELOW).

(3). FOR CASES WHEN END PANELS ARE USE JOINTLY W/ 15" LONG TRACK (2) AT BOTTOM BUT END PANELS ARE NOT CONNECTED TO BOTTOM TRACK (2), A STOP BAR (8) SHALL BE PROVIDED AT TOP OF SUCH PANELS.

(4). FOR INSTALLATIONS WHEN END PANELS AND SOME INTERIOR PANELS ARE DIRECTLY MOUNTED TO EXISTING SILL WALL BY MEANS OF PANELMATES, ONE INTERIOR PANEL MAY BE USED JOINTLY W/ TRACK (2) AT BOTTOM ATTACHING BOTTOM TRACK TO WALL W/ TWO PANELMATES FOLLOWING SPACING SHOWN ON ELEVATION AND W/ A 3 1/2" Min. EDGE DISTANCE. FOR THIS CASE, INTERIOR PANEL USED JOINTLY W/ (2) DOES NOT NEED TO BE CONNECTED TO (2) BY ANY MEANS. TRACK (2) SHALL BE INSTALLED SUCH THAT ADJACENT PANELS (TO THE LEFT & RIGHT SIDE OF INTERIOR PANEL) HAVE THEIR OVERLAPS RETAINED BY (2).

WALTER A. TILLIT JR. LICENSE No. 44167 STATE OF FLORIDA PROFESSIONAL ENGINEER

2/25/2026

P.E. SEAL/SIGNATURE/DATE

©2026 TILTECO, INC.

TILTECO INC.
TILLIT TESTING & ENGINEERING COMPANY
6355 N.W. 36th. St., Ste. 305, VIRGINIA GARDENS, Fl. 33166
Phone : (305) 871-1530 . Fax : (305) 871-1531
CA-0006719
WALTER A. TILLIT Jr., P.E.
FLORIDA Lic. # 44167

FLORIDA BUILDING CODE (High Velocity Hurricane Zone)

20 GAGE GALVANIZED STEEL STORM PANEL

GLOBAL PROTECTION PRODUCTS, LLC.
4800 S.W. 51 STREET
DAVIE, FL. 33314
PHONE: (954)689-7545, FAX: (954)689-8797

REV. No	DESCRIPTION	DATE	REV. No	DESCRIPTION	DATE
1	OLD 23-194	6/25/26	3	–	–
2			4	–	–

W.H.
DRAWN BY:

6/25/2026
DATE:

26-070
DRAWING No:

SHEET 23 OF 26

INSTALLATION DETAILS FOR SERIES 2000 AND 1000 E-Z HANG STORM PANEL (1) INTO POURED CONCRETE OR CONCRETE BLOCK

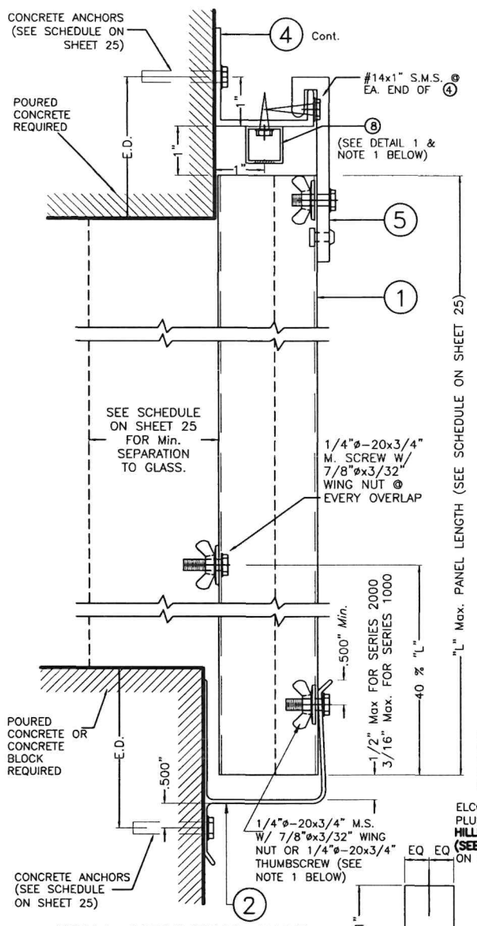

WALL MOUNTING INST. SECTION 1'

SCALE 3/8=1"

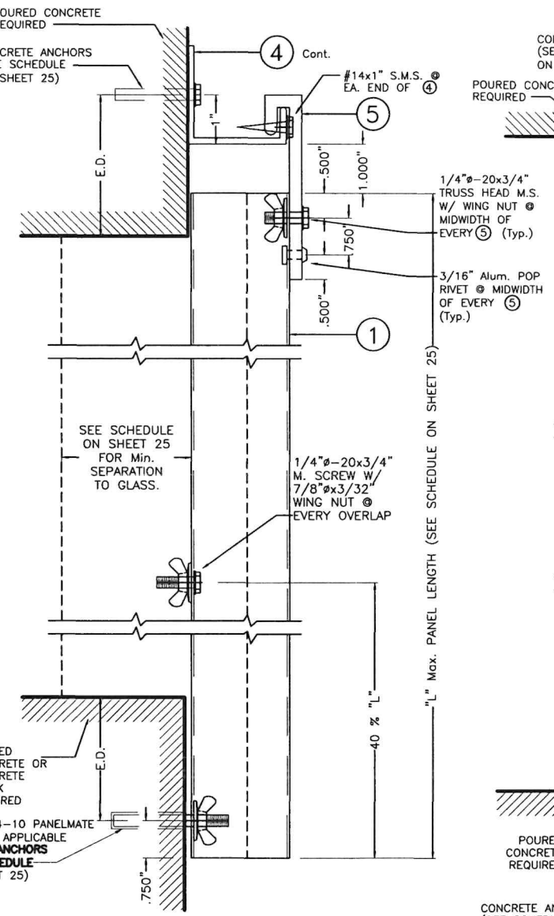

WALL AND DIRECT MOUNTING INST. SECTION 2'

SCALE 3/8=1"

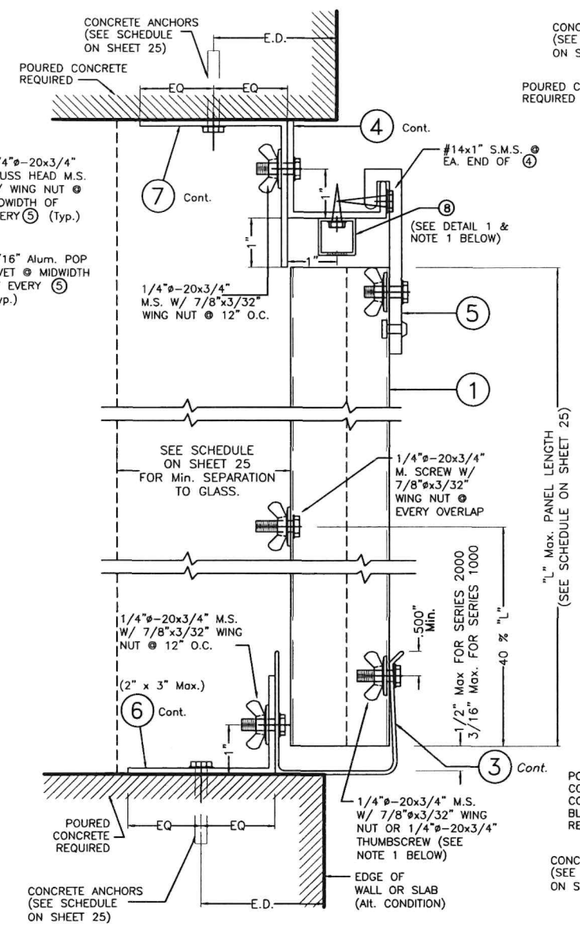

FLOOR TO CEILING MOUNTING INST. SECTION 3'

SCALE 3/8=1"

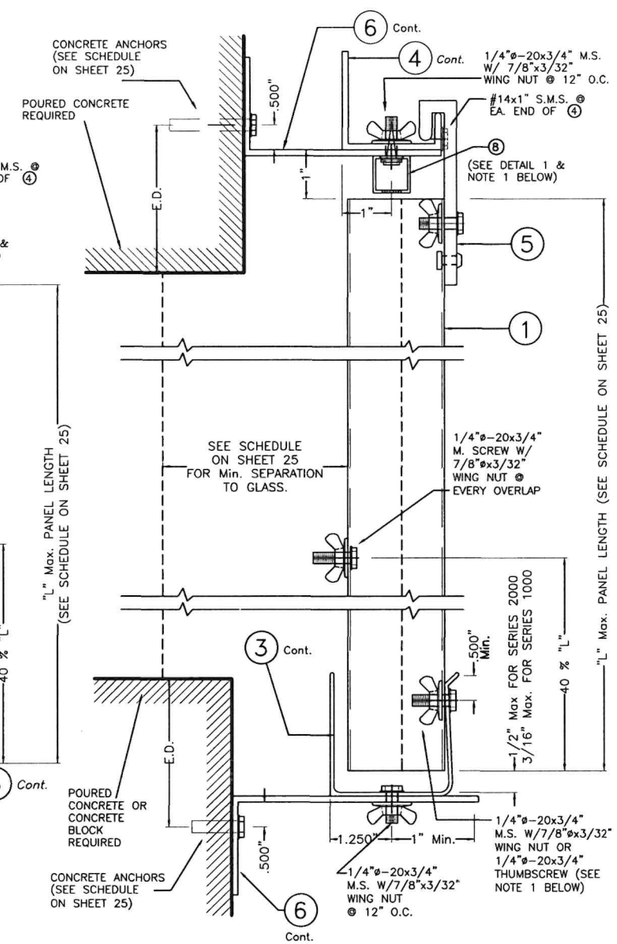

BUILD-OUT MOUNTING INST. SECTION 4'

SCALE 3/8=1"

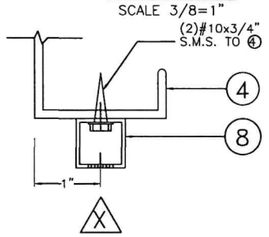

DETAIL 1

SCALE: 1/2" = 1"

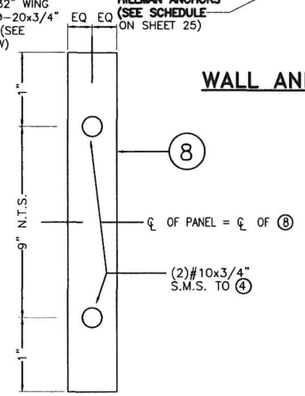

VIEW X

NOTE 1:

SEE SPECIFICATIONS AND REQUIREMENTS FOR USE OF STOP BAR (8) AT TOP AS WELL AS PANEL (1) CONNECTION TO TRACKS (2) OR (3) AT BOTTOM, BASED ON 1000 OR 2000 SERIES INSTALLATION TYPE ON SHEET 23.

NOTE FOR COMBINATION OF SECTIONS:

TOP & BOTTOM MOUNTINGS CAN BE COMBINED IN ANY WAY TO SUIT ANY INSTALLATION.

E.D. = EDGE DISTANCE (SEE SCHEDULE ON SHEET 25 & SHEET 21A)

WALTER A. TILLIT JR. LICENSE No. 44167 STATE OF FLORIDA PROFESSIONAL ENGINEER

P.E. SEAL/SIGNATURE/DATE

FLORIDA BUILDING CODE (High Velocity Hurricane Zone)

©2026 TILTECO, INC.

TILTECO INC.
TILLIT TESTING & ENGINEERING COMPANY
6355 N.W. 36th. St., Ste. 305, VIRGINIA GARDENS, Fl. 33166
Phone : (305) 871-1530 . Fax : (305) 871-1531
CA-0006719
WALTER A. TILLIT Jr., P.E.
FLORIDA Lic. # 44167

20 GAGE GALVANIZED STEEL STORM PANEL

GLOBAL PROTECTION PRODUCTS, LLC.
4800 S.W. 51 STREET
DAVIE, FL. 33314
PHONE: (954)689-7545, FAX: (954)689-8797

REV. No	DESCRIPTION	DATE	REV. No	DESCRIPTION	DATE
1	OLD 23-194	6/25/26	3	–	–
2			4	–	–

W.H.
DRAWN BY:

6/25/2026
DATE:

26-070
DRAWING No:

MAXIMUM A.S.D. DESIGN PRESSURE RATING (p.s.f.) AND CORRESPONDING MAXIMUM PANEL LENGTH "L" SCHEDULE FOR SERIES 1000/2000 E-Z HANG STORM PANEL ① SYSTEM

(VALID ONLY FOR PANEL INSTALLATIONS AS PER SECTIONS 1' THRU 4', SHEET 24).

MAXIMUM A.S.D. DESING PRESSURE RATING (p.s.f.)	Max. PANEL LENGTH "L" (in.) (SEE SECTIONS)	MINIMUM SEPARATION TO GLASS	PANEL CONDITION	APPLICABLE TO SECTIONS
+66.0, −75.3	70" OR LESS	2 9/16"	BOLTED *	1', 2', 3', 1"W, 2"W & 3"W
+66.0, −75.3	70" OR LESS	2 7/8"	BOLTED *	4' & 4"W

* BOLTED W/ 1/4"ø−20x3/4" S.S. M.S. & WINGNUT AT OVERLAP & 40% OF PANEL LENGTH MEASURED FROM BOTTOM OF PANEL.

MAXIMUM A.S.D. DESIGN PRESSURE RATING (p.s.f.) AND CORRESPONDING MAXIMUM ANCHOR SPACING SCHEDULE FOR INSTALLATIONS INTO CONCRETE & CONCRETE BLOCK STRUCTURES Δ

(VALID ONLY FOR PANEL INSTALLATIONS AS PER SECTIONS 1' THRU 4', SHEET 24).

MAXIMUM A.S.D. DESIGN PRESSURE RATING (p.s.f.)	MAXIMUM ANCHORS SPACING FOR E. D. = 3 1/2" **																					APPLICABLE TO SECTIONS # & ANY COMBINATION OF THEM	MAXIMUM PANEL LENGTH "L" (in.)
	ULTRACON+ OR ULTRACON SS4		ELCO PANELMATE FEMALE ID		ELCO PANELMATE PLUS		HILLMAN SOLID SET 1/4" SCREW CS			HILLMAN SOLID SET #14 FEMALE CS.			HILLMAN SOLID SET 1/4" SCREW 410 SS.			HILLMAN SOLID SET #14 MALE CS.			HILLMAN SOLID SET #14 MALE 304 SS.				
	TO CONCRETE	TO CONCRETE BLOCK	TO CONCRETE	TO CONCRETE BLOCK	TO CONCRETE	TO CONCRETE BLOCK	TO CONCRETE	GROUT FILLET	TO CONCRETE BLOCK	TO CONCRETE	GROUT FILLET	TO CONCRETE BLOCK	TO CONCRETE	GROUT FILLET	TO CONCRETE BLOCK	TO CONCRETE	GROUT FILLET	TO CONCRETE BLOCK	TO CONCRETE	GROUT FILLET	TO CONCRETE BLOCK		
+66.0, −75.3	12"	N/A	12"	N/A	12"	N/A	12"	N/A	N/A	12"	N/A	N/A	12"	N/A	N/A	12"	N/A	N/A	12"	N/A	N/A	1' & 2' (TOP)	70" OR LESS
	11"	3" *	5"	4"	5"	4"	9"	4"	4"	9 1/2"	4"	3 1/2"	9"	4"	4"	9 1/2"	4"	3 1/2"	7 1/2"	4"	2 1/4"	1' (BOTTOM) SERIES 2000 +	
	12"	3"	8"	6"	8"	6"	12"	6"	5"	12"	6"	4"	12"	6"	4 1/2"	12"	6"	4"	11"	6"	2 1/2"	1' (BOTTOM) SERIES 1000 ++	
	N/A	N/A	N/A	N/A	12 1/2"	11"	N/A	N/A	N/A	12 1/2"	12 1/2"	6 1/4"	N/A	N/A	N/A	12 1/2"	12 1/2"	6 1/4"	12 1/2"	12 1/2"	N/A	2' (BOTTOM)	
	7"	N/A	4 1/2"	N/A	4 1/2"	N/A	7"	N/A	N/A	7"	N/A	N/A	7"	N/A	N/A	7"	N/A	N/A	6 1/2"	N/A	N/A	3' (TOP)	
	12"	N/A	9 1/2"	N/A	9 1/2"	N/A	9 1/2"	N/A	N/A	9 1/2"	N/A	N/A	9 1/2"	N/A	N/A	9 1/2"	N/A	N/A	9 1/2"	N/A	N/A	3' (BOTTOM)	
	12"	N/A	12"	N/A	12"	N/A	12"	N/A	–	12"	–	–	12"	–	–	12"	–	–	12"	–	–	4' (TOP)	
	12"	6"	12"	11"	12"	11"	12"	11"	9 1/2"	12"	11"	7 1/2"	12"	11"	8 1/2"	12"	11"	7 1/2"	12"	11"	5"	4' (BOTTOM)	

* LIMITED TO 66.0 p.s.f. A.S.D. DESIGN PRESSURE RATING.

\+ REQUIRES Max. DISTANCE BETWEEN BOTTOM OF PANEL AND ② TO BE: 1/2"

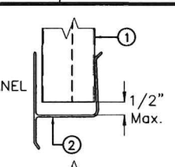

\+\+ REQUIRES Max. DISTANCE BETWEEN BOTTOM OF PANEL AND ② TO BE: 3/16"

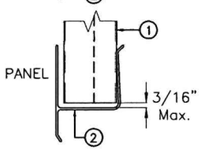

SEE SHEET 15 FOR ANCHORS TYPE & SPACING FOR INSTALLATIONS INTO WOOD FRAME BUILDING.
MINIMUM ANCHOR SPACINGS AND MINIMUM EDGE DISTANCE ARE INDICATED ON THIS SCHEDULE. FOR E.D. LESS THAN INDICATED ON SCHEDULE REDUCE ANCHOR SPACING BY MULTIPLYING SPACING SHOWN ON SCHEDULE BY THE FOLLOWING FACTORS. FOR THIS OPERATION TO BE POSSIBLE, REDUCED SPACING OBTAINED USING FACTOR SHALL NOT BE LESS THAN MINIMUM SPACING INDICATED FOR EACH ANCHOR TYPE AT ANCHORS LEGEND.

ANCHOR TYPE		1/4"ø	1/4"ø	1/4"ø	HILLMAN SOLID-SET 1/4" CS	HILLMAN SOLID-SET #14 FEM. CS	HILLMAN SOLID-SET 1/4" 410 SS	HILLMAN SOLID-SET #14 MALE CS	HILLMAN SOLID-SET #14 MALE 304 SS
		ULTRACON+ OR ULTRACON SS4	ELCO PANELMATE FEMALE ID	ELCO PANELMATE PLUS					
Min. ANCHOR SPACING (in.)		3	3	3	3	3	3	3	3
*EDGE DISTANCE (E.D. Min.)	Concrete (in.)	3	3	3	3	3	3	3	3
	Grout filled (in.)	–	–	–	3	3	3	3	3
	Concrete Block (in.)	3	3 1/2	3 1/2	3	3	3	3	3
ACTUAL E.D. (EDGE DISTANCE)					FACTOR				
1 1/2"		.35	–	–	–	–	–	–	–
2 1/2"		–	–	–	–	–	–	–	–
3"		1.00	–	1.00	–	–	–	–	–
3 1/2"		–	1.00	–	–	–	–	–	–

SEE SHEET 21A FOR MIN. EMBEDMENT OF ANCHORS.

FLORIDA BUILDING CODE (High Velocity Hurricane Zone)

WALTER A. TILLIT JR. LICENSE No. 44167 STATE OF FLORIDA PROFESSIONAL ENGINEER
2/2026
P.E. SEAL/SIGNATURE/DATE

©2026 TILTECO, INC.

TILTECO INC.
TILLIT TESTING & ENGINEERING COMPANY
6355 N.W. 36th. St., Ste. 305, VIRGINIA GARDENS, Fl. 33166
Phone : (305) 871-1530 . Fax : (305) 871-1531
CA-0006719
WALTER A. TILLIT Jr., P.E.
FLORIDA Lic. # 44167

20 GAGE GALVANIZED STEEL STORM PANEL

GLOBAL PROTECTION PRODUCTS, LLC.
4800 S.W. 51 STREET
DAVIE, FL. 33314
PHONE: (954)689-7545, FAX: (954)689-8797

REV. No	DESCRIPTION	DATE	REV. No	DESCRIPTION	DATE
1	OLD 23-194	6/25/26	3	–	–
2			4	–	–

W.H.
DRAWN BY:
6/25/2026
DATE:
26-070
DRAWING No:
SHEET 25 OF 26

INSTALLATION DETAILS FOR SERIES 2000 & 1000 E-Z HANG STORM PANEL ①
INTO EXISTING WOOD STRUCTURES

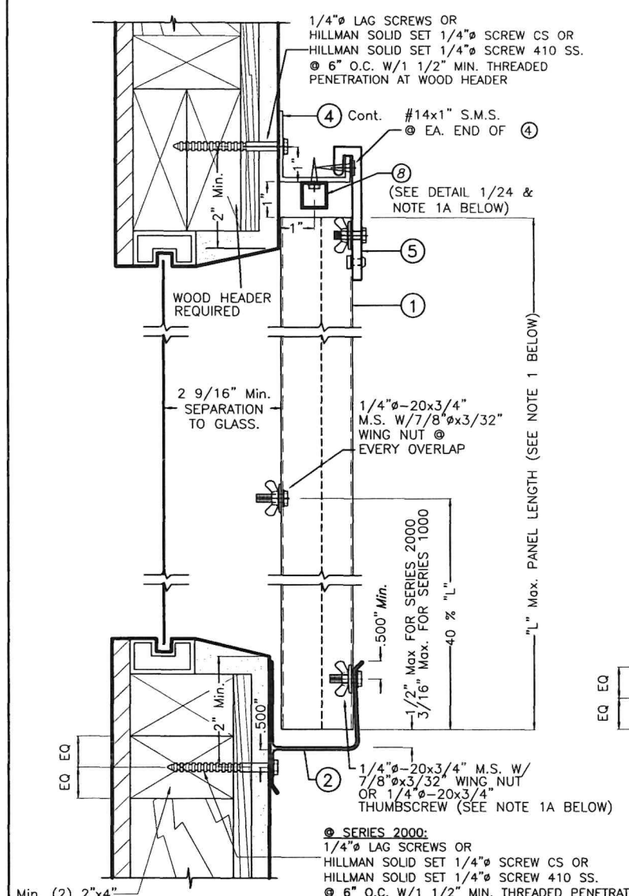

@ SERIES 2000:
1/4"ø LAG SCREWS OR
HILLMAN SOLID SET 1/4"ø SCREW CS OR
HILLMAN SOLID SET 1/4"ø SCREW 410 SS.
@ 6" O.C. W/1 1/2" MIN. THREADED PENETRATION

@ SERIES 1000:
(2) ELCO #14-10 PANELMATE PLUS
W/1 7/8" MIN. PENETRATION @ 12"O.C OR
HILLMAN SOLID SET 1/4"ø SCREW CS OR
HILLMAN SOLID SET 1/4"ø SCREW 410 SS.
@ 10" O.C. W/1 1/2" MIN. THREADED PENETRATION

WALL MOUNTING INSTALLATION ALTERNATIVE 1"W

SCALE 1/4"=1"

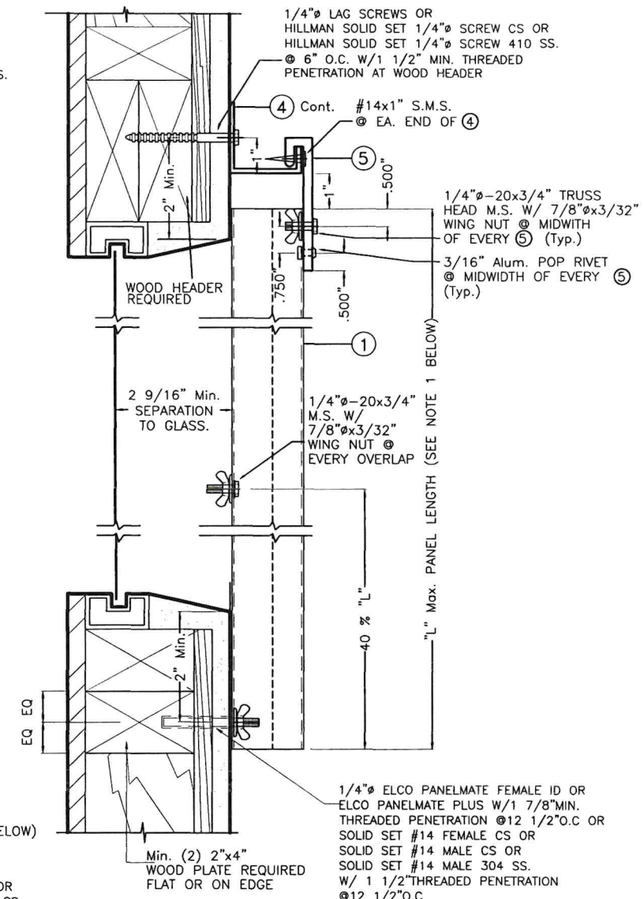

WALL MOUNTING INSTALLATION ALTERNATIVE 2"W

SCALE 1/4"=1"

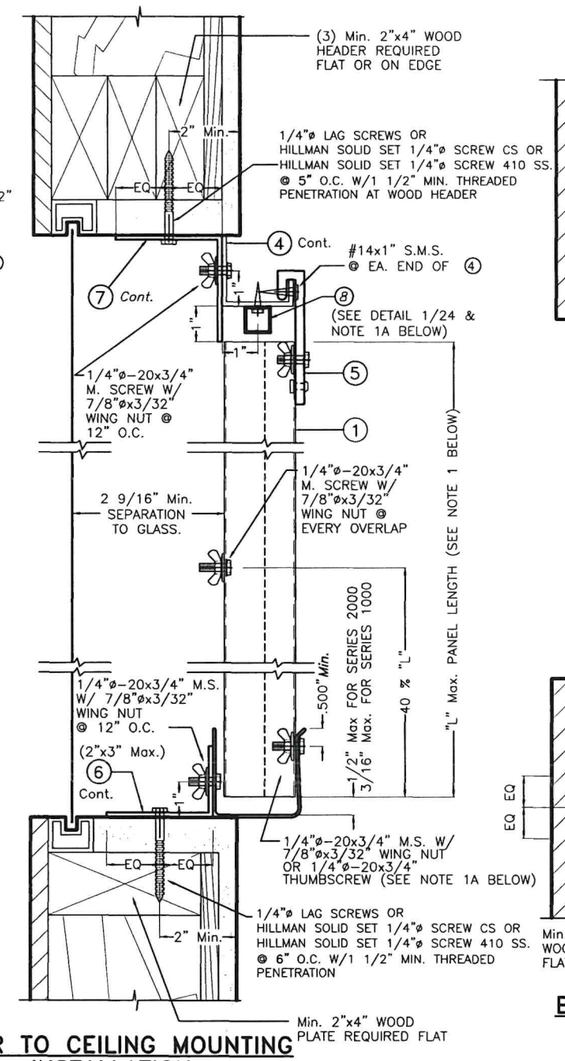

FLOOR TO CEILING MOUNTING INSTALLATION ALTERNATIVE 3"W

SCALE 1/4"=1"

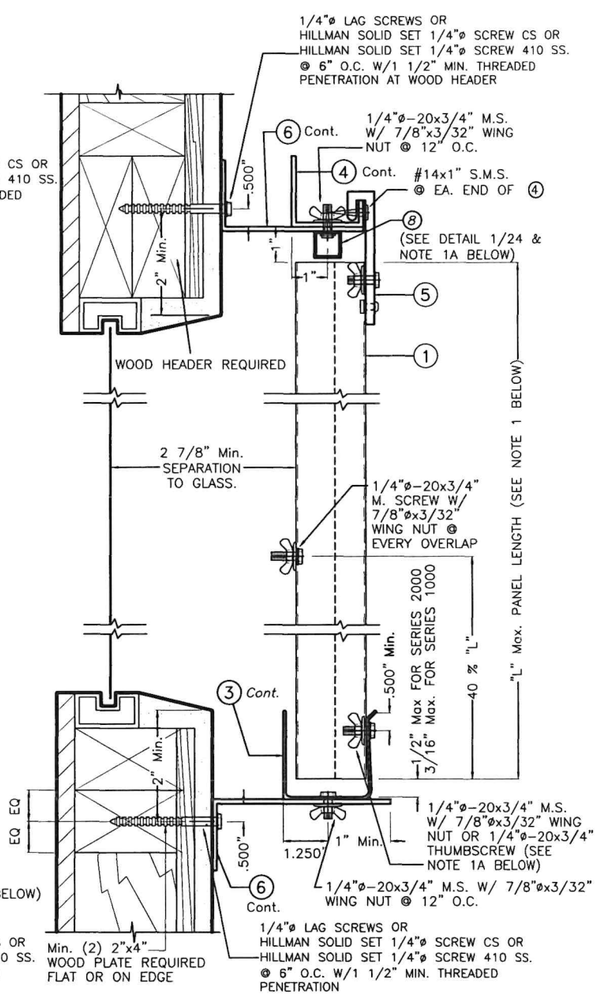

BUILD-OUT MOUNTING INSTALLATION ALTERNATIVE 4"W

SCALE 1/4"=1"

NOTES:

1. INSTALLATIONS ARE ONLY VALID FOR BUILDINGS WITH A.S.D. DESIGN LOADS UP TO +66.0, -75.3 psf AND PANEL'S LENGTH UP TO 5'-10".
2. FOR NEW WOOD FRAME CONSTRUCTION: WOOD MEMBERS TO BE SOUTHERN PINE No. 2, W/ SPECIFIC DENSITY OF 0.55 OR EQUAL.

NOTE 1A:

SEE SPECIFICATIONS AND REQUIREMENTS FOR USE OF STOP BAR ⑧ AT TOP AS WELL AS PANEL ① CONNECTION TO TRACKS ② OR ③ AT BOTTOM, BASED ON 1000 OR 2000 SERIES INSTALLATION TYPE ON SHEET 23.

NOTE FOR COMBINATION OF SECTIONS:

TOP & BOTTOM MOUNTINGS CAN BE COMBINED IN ANY WAY TO SUIT ANY INSTALLATION.

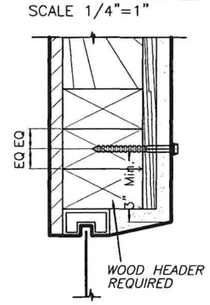

ALTERNATIVE TOP HEADER WOOD FRAME CONDITION & ANCHOR LOCATION

SCALE: 1/4" = 1"

NOTE : SHUTTER TRACKS NOT SHOWN FOR CLARITY

WALTER A. TILLIT JR. LICENSE No. 44167 STATE OF FLORIDA PROFESSIONAL ENGINEER

P.E. SEAL/SIGNATURE/DATE

©2026 TILTECO, INC.

TILTECO INC.
TILLIT TESTING & ENGINEERING COMPANY
6355 N.W. 36th. St., Ste. 305, VIRGINIA GARDENS, Fl. 33166
Phone : (305) 871-1530 . Fax : (305) 871-1531
CA-0006719
WALTER A. TILLIT Jr., P.E.
FLORIDA Lic. # 44167

FLORIDA BUILDING CODE (High Velocity Hurricane Zone)

20 GAGE GALVANIZED STEEL STORM PANEL

GLOBAL PROTECTION PRODUCTS, LLC.
4800 S.W. 51 STREET
DAVIE, FL. 33314
PHONE: (954)689-7545, FAX: (954)689-8797

REV. No	DESCRIPTION	DATE	REV. No	DESCRIPTION	DATE
1	OLD 23-194	6/25/26	3	–	–
2			4	–	–

W.H.
DRAWN BY:

6/25/2026
DATE:

26-070
DRAWING No:

SHEET 26 OF 26